The State of Tennessee

Integrated Criminal Justice Project

The "As-Is" Model

November 29, 2004

TABLE OF CONTENTS

ACKNOWLEDGEMENTS....6
ICJ Steering Committee....6
ICJ Steering Committee Staff....6
SUMMARY OF "AS-IS" MODEL....7
Introduction....7
Mission....7
Criminal Justice Processes Studied....7
Topics within each Criminal Justice Process....8
Diagram Standards....9
Diagram Legend....10
Information Exchange Documentation Standards....11
THE BIG PICTURE....12
Criminal Justice Information Exchange in Tennessee....12
High-Level Business Process Diagram....13
High-Level Business Process Diagram....13
High-Level Information Systems Diagram....14
INCIDENT AND INVESTIGATION....15
Incident & Investigation: Process Diagram....15
Incident & Investigation: Process Overview....16
Incident & Investigation: Agency Roles & Responsibilities....19
Incident & Investigation: Information Exchange....20
Incident & Investigation: Data Elements....23
Incident & Investigation: Technology....24
Incident & Investigation: Forms....25
Incident & Investigation: Opportunities for Improvement....34
WARRANT PROCESSING....35
Warrant Processing: Process Diagram....35
Warrant Processing: Process Overview....36
Warrant Processing: Agency Roles & Responsibilities....38
Warrant Processing: Information Exchange....39
Warrant Processing: Data Elements....41
Warrant Processing: Technology....42
Warrant Processing: Forms....43
Warrant Processing: Opportunities for Improvement....47
ARREST & BOOKING....48
Arrest & Booking: Process Diagram....48
Arrest & Booking: Process Overview....51
Arrest & Booking: Agency Roles & Responsibilities....55
Arrest & Booking: Information Exchange....57
Arrest & Booking: Data Elements....59
Arrest & Booking: Technology....60
Arrest & Booking: Forms....61
Arrest & Booking: Opportunities for Improvement....64
GENERAL SESSIONS COURT....65
General Sessions Court: Process Diagram....65
General Sessions Court: Process Overview....67
General Sessions Court: Agency Roles & Responsibilities....71
General Sessions Court: Information Exchange....74

General Sessions Court: Data Elements 78
General Sessions Court: Technology 79
General Sessions Court: Forms 80
General Sessions Court: Opportunities for Improvement 84

CIRCUIT OR CRIMINAL COURT 85
Circuit or Criminal Court: Process Diagram 85
Circuit or Criminal Court: Process Overview 86
Circuit or Criminal Court: Agency Roles & Responsibilities 88
Circuit or Criminal Court: Information Exchange 90
Circuit or Criminal Court: Data Elements 94
Circuit or Criminal Court: Technology 95
Circuit or Criminal Court: Forms 96
Circuit or Criminal Court: Opportunities for Improvement 101

PROBATION 102
Probation: Process Diagram 102
Probation: Process Overview 104
Probation: Agency Roles & Responsibilities 107
Probation: Information Exchange 109
Probation: Data Elements 112
Probation: Technology 113
Probation: Forms 114
Probation: Opportunities for Improvement 122

CORRECTION 123
Correction: Process Diagram 123
Correction: Process Overview 124
Correction: Agency Roles & Responsibilities 126
Correction: Information Exchange 127
Correction: Data Elements 129
Correction: Technology 130
Correction: Forms 131
Correction: Opportunities for Improvement 133

PAROLE 134
Parole: Process Diagram 134
Parole: Process Overview 136
Parole: Agency Roles & Responsibilities 139
Parole: Information Exchange 141
Parole: Data Elements 144
Parole: Technology 145
Parole: Forms 146
Parole: Opportunities for Improvement 150

CONCLUSION 151

APPENDIX A: AGENCIES 152
Administrative Office of the Courts (AOC) 152
Board of Probation and Parole (BOPP) 152
Bureau of Justice Assistance 153
Department of Correction (TDOC) 154
Department of Safety: Criminal Investigations Division 154
Department of Safety: Tennessee Highway Patrol 154
District Attorneys General Conference (TNDAGC) 155
District Public Defender's Conference 155

Federal Bureau of Investigation (FBI) 155
International Association of Chiefs of Police (IACP) 156
Justice Information Sharing Professionals (JISP) 156
National Criminal Justice Association (NCJA) 156
National Sheriff's Association (NSA) 157
Office of Criminal Justice Programs (OCJP) 157
Office of Information Resources (OIR) 157
SEARCH - National Consortium for Justice Information and Statistics 158
State Court Clerks Association of Tennessee 158
Tennessee Association of Chiefs of Police (TACP) 159
Tennessee Bureau of Investigation (TBI) 159
Tennessee Sheriffs Association (TSA) 159
US Department Of Justice - Office Of Justice Programs 160

APPENDIX B: DATA ELEMENTS 161

APPENDIX C: SOFTWARE APPLICATIONS BY CATEGORY 172

APPENDIX D: SYSTEMS IN ALPHABETICAL ORDER 174
Automated Fingerprint Identification System (AFIS) 174
Bridge Court Management Software 174
Case&Point 175
CITED 175
COPSRMS 176
Criminal Activities Intelligence Network (CAIN) 176
Criminal Justice Information System (CJIS) 177
Criminal Justice Kiosk 178
Criminal Justice System (CJUS) 179
DataMaxx 180
DataQuest Court Docket 180
DocSTAR (Document Storage and Retrieval) 181
DOS Driver's License History 181
DOS Driver's License Issuance 181
DOS Vehicle Title & Registration 182
Felony Offender Information Lookup (FOIL) 182
FileNet 182
FullCourt 183
Government Service Automation (GSA) 183
Homeland Security Information Network (HSIN) 183
HTE 184
Intergraph Computer Aided Dispatch System 184
Jail Management System (JMS)-Shelby County 185
Justice Information Management System (JIMS) 185
Justice Support System (JSS) 186
Law Enforcement Records Information System (LERIS) 186
LiveScan 187
National Crime Intelligence Center (NCIC) 188
National Incident Based Reporting System (NIBRS) 189
National Law Enforcement Telecommunication System (NLETS) 189
NetRMS 190
Onbase 190
Printrak Fingerprint Identification System 191
ProLaw 191
Sheriffs Office Management System (SOMS) 192
Spillman 192

TBI Instant Check System (TICS) 193
T-CAST 193
Tennessee Applicant Processing Services (TAPS) 194
Tennessee Court Information System (TnCIS) 194
Tennessee Criminal History Repository (TCHR) 195
Tennessee Incident Based Reporting System (TIBRS) 195
Tennessee Information Enforcement System (TIES) 196
Tennessee Offender Management Information System (TOMIS) 196
Tennessee Judicial Information System (TJIS) 197
Tennessee Repository for Apprehension of Persons (TRAP) 197
Tiburon 198
Victim Notification System (VINE) 198
VisionRMS 199

APPENDIX E: ACRONYMS 200

ACKNOWLEDGEMENTS

This "As-Is" Model was prepared under the direction of Tennessee's Integrated Criminal Justice Information Project Steering Committee.

This document was developed under the ICJ grant from the Bureau of Justice Assistance, Office of Justice Programs, U.S. Department of Justice.

Members of the ICJ project team wrote this document. The opinions, findings and conclusions or recommendations expressed in this document are those of the authors and do not necessarily represent the official positions or policies of the U.S. Department of Justice.

We gratefully acknowledge the Steering Committee leadership and contributions of a number of staff leaders who's shared in the ICJ vision.

ICJ Steering Committee

- The Honorable Rob Briley, Tennessee General Assembly - House of Representatives
- Cornelia Clark, Director, Administrative Office of the Courts
- Gayle Ray, Deputy Commissioner, Tennessee Department of Correction
- Jamie Etheridge, Executive Director, Office of Information Resources
- Andy Hardin, Executive Director, Tennessee District Public Defenders Conference
- James Wallace Kirby, Executive Director, Tennessee District Attorneys General Conference
- Jerry Humble, Major General, Director, Office of Homeland Security
- Norman Lewis, President, Tennessee Sheriffs Association, Sheriff, Montgomery County
- Tom Moore, Deputy Commissioner, Tennessee Department of Safety
- Fred Phillips, Commissioner, Tennessee Department of Safety
- Lee Reese, President, Tennessee Association of Chiefs of Police, Chief, Cleveland Police Dept.
- Mahailiah Hughes, Circuit Court Clerk, Sumner County
- Paul G. Summers, Attorney General and Reporter, Tennessee Attorney General
- Mark Gwyn, Director, Tennessee Bureau of Investigation
- Charles Traughber, Chairman, Board of Probation & Parole

ICJ Steering Committee Staff

- Kevin Batts, Director of Information Systems, Tennessee District Public Defenders Conference
- Patricia Dishman, Director, Office of Criminal Justice Programs
- Ann Lynn Walker, Assistant Director for Technology, Administrative Office of the Courts
- Don Baisden, Director of Information Systems, Tennessee Department of Safety
- Donna Blackburn, Tennessee Board of Probation & Parole
- Terry Hazard, Criminal Justice Consultant, County Technical Assistance Service
- Bruce Langsdon, Program Manager, Office of Criminal Justice Programs
- Ben Lindamood, Acting Director of Information Systems, Tennessee Department of Correction
- Judie Martin, Representative, Tennessee Association of Chiefs of Police
- Maggi McLean, Executive Director, Tennessee Association of Chiefs of Police
- John Nanni, Business Analyst, Office of Information Resources
- Jay Palmer, Director of Information Systems, Tennessee District Attorneys General Conference
- Clint Parsons, Director of Information Systems, Tennessee Board of Probation & Parole
- Bill Scollon, Program Manager, Office of Criminal Justice Programs
- Brad Truitt, Assistant Director, Information Systems, Tennessee Bureau of Investigation
- Joe Whalen, Assistant Attorney General, Tennessee Attorney General
- Fausto Vega, Business Analyst, Office of Information Resources
- Jeff McElroy, Integration/Project Coordinator, Tennessee District Attorneys General Conference

SUMMARY OF "AS-IS" MODEL

Introduction

The purpose of the "As-Is" Model is to help the ICJ project stakeholders to understand the current information exchange processes in Tennessee's criminal justice system. The "As-Is" Model supports the Vision Statement of the ICJ Steering Committee:

> *To enhance public safety through effective integration of criminal justice information throughout Tennessee by promoting practices that improves cost effectiveness, information sharing, and timely appropriate access to accurate information while recognizing the unique contribution of each criminal justice component.*

Mission

The "As-Is" Model supports the Mission Statement of the ICJ Steering Committee:

> *(1) Provide a framework to integrate criminal justice information that is congruent with emerging technologies, national and state standards, while complementing local information sharing initiatives. (2) Minimize redundant criminal justice record information entry while identifying reengineering and automation opportunities. (3) Improve the use of the statewide individual identification number that would link together all local and state criminal justice information. (4) Develop methods to secure long term funding and support for integrated criminal justice record and information management.*

Criminal Justice Processes Studied

The "As-Is" Model focuses on the high-level view of the criminal justice processes in Tennessee (see diagram on the right). More detailed perspectives of key criminal justice information exchanges entities are also included. These entities include:

Incidents & Investigation

Arrest Warrant Processing

Arrest & Booking

General Sessions Court

Circuit or Criminal Court

Probation

Correction

Parole

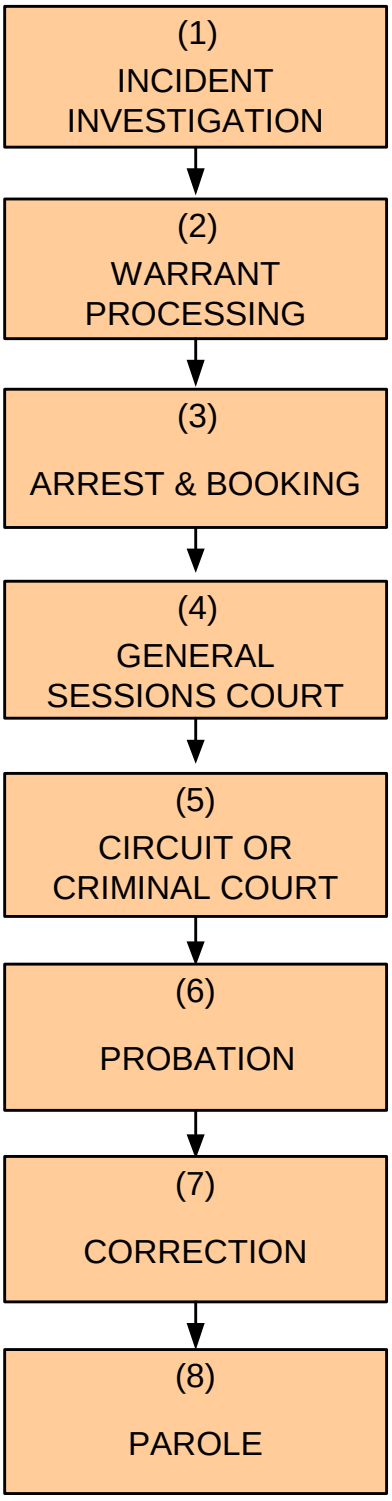

Topics within each Criminal Justice Process

The "As-Is" Model will be used by the project team to illustrate how the current information exchange is taking place and to lay the foundation for the development of the "To-Be" Model. The "To-Be" Model will define criminal justice information exchange and automation for the future. The project team will perform a "Gap Analysis" to determine the differences between the "As-Is" Model and the "To-Be" Model. From this information, the feasibility of future integration projects will be determined.

- **Process Diagram**
  A diagram that depicts the origination, handling, and transfer of criminal justice information from within a criminal justice process.

- **Process Overview**
  A description of the steps of the process using sentence and paragraph form.

- **Agency Roles & Responsibilities**
  A listing of the Agencies and their roles and responsibilities regarding the process.

- **Information Exchange**
  A table that describes the information that is exchanged during the process.

- **Data Elements**
  A list and description of the data elements that are involved in the process.

- **Technology**
  A general description of the technology that is used to complete the process.

- **Documents and Forms**
  A placeholder for the key forms and documents utilized to complete the process.

- **Opportunities for Improvement**
  A list of suggestions and observations that were gathered during the “As-Is” Model interviews.

Diagram Standards

The symbols below depict the various information exchanges within the Tennessee Criminal Justice System. The project team looked at a variety of modeling tools and developed a hybrid approach to simplify all processes down to a basic set of interactions. The following legend defines each.

	START/END	**Manual:** The first or last step in a process. **Online:** The first step in an automated, electronic or online process.
	QUERY/RESPONSE	**Manual:** Manually seek an answer from a person or agency that will determine the next step in a process. **Online:** Query a computer for an online response that will determine the next step in a process.
	ENTER DATA	**Manual:** Write information on a form or document. **Online:** Data entry into a computer system.
	TRANSFER OR EXCHANGE	**Manual:** Physically distribute information on a document from one agency, department or person to another. **Online:** Transmit information electronically over a computer system from one agency, department or person to another.
	STORE DATA	**Manual:** Organize paper in a file cabinet or archive room. **Online:** Save data on a computer database, repository, network or online file system.
	REPORT	**Manual:** Hand written report. **Online:** Computer-generated report.
	HANDLE	**Manual:** A physical action required by a person within the process. This includes folding or making copies of a document.
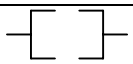	**BRANCH**	Branch one-way or the other.
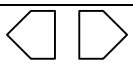	**GO TO**	Go to the GO TO symbol on the next page.

Diagram Legend

The legend below depicts the various abbreviations used throughout each of the Process Diagrams.

BOPP	**Board of Probation and Parole**
C C	**Court Clerk's Office**
CIS	**Court Information System**
D	**Defendant**
D A	**District Attorney**
D C	**Defendant Counsel**
DFS	**Director of Field Services (Parole)**
J	**Judge**
J C	**Judicial Commissioner**
L E	**Law Enforcement Agency**
P	**Probationer**
P D	**Public Defender**
P O	**Probation Officer**
PRL O	**Parole Officer**
PRLE	**Parolee**
RMS	**Records Management System**
TBI	**Tennessee Bureau of Investigation**
TDOC	**Tennessee Department of Correction**

Information Exchange Documentation Standards

The As-Is Model summarizes the key interagency information exchange points within the: (1) Incident & Investigation, (2) Arrest Warrant, (3) Arrest & Booking, (4) General Sessions Court, (5) Circuit or Criminal Court, (6) Probation, (7) Correction and (8) Parole processes. The definitions of the information exchange elements contained in these tables are shown below.

- **Event**

  The action that triggers the exchange of information.

- **Information Exchanged**

  The type of data that is exchanged.

- **Sending Agency**

  The criminal justice agency that sends the information.

- **Receiving Agency**

  The criminal justice agency that receives the information.

- **Method**

  The manner or form in which information is exchanged.

- **Frequency**

  When an event takes place in 80% or more of the total number of process occurrences; it has been assigned a Frequency value of “HIGH”. When an event takes place in less than 20% of the total number of process occurrences; it has been assigned a Frequency value of “LOW”. Otherwise, the Frequency value is unpopulated. The Frequency assignment is based on a composite view of all Tennessee Criminal Justice Agencies. Actual percentages of event occurrence may differ for some agencies or jurisdictions.

THE BIG PICTURE

Criminal Justice Information Exchange in Tennessee

The diagram below shows the multiple criminal justice agencies that are involved in sharing criminal justice information.

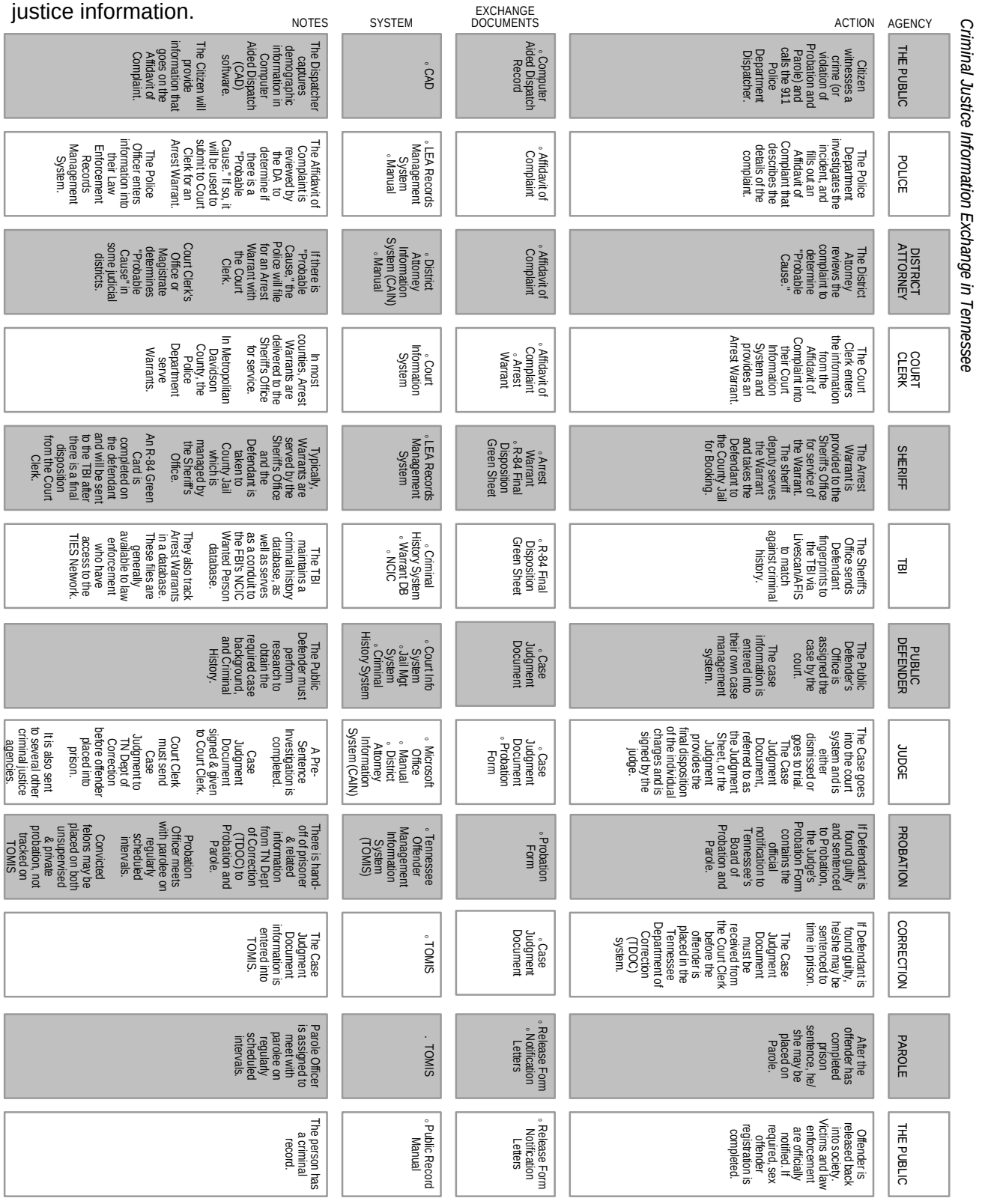

High-Level Business Process Diagram

Tennessee Criminal Justice Process Summary

CRIME OR VIOLATION OF PROBATION OR PAROLE REPORTED		A crime is reported to law enforcement. Law enforcement completes a report, sends an Officer to the scene and may request an Arrest Warrant. If the Officer captures someone in a criminal act, the defendant is taken to jail and the Officer files for an Arrest Warrant afterwards.
AFFIDAVIT OF COMPLAINT		The first step toward obtaining an Arrest Warrant is to have law enforcement complete an Affidavit of Complaint. The Officer or individual swears to the information contained on the Affidavit of Complaint. The Affidavit of Complaint is verified for "probable cause" by the Court Clerk, District Attorney, Judicial Commissioner and/or Magistrate.
WARRANT IS ISSUED		The Court Clerk completes the Warrant based on the information on the Affidavit of Complaint. The Warrant is issued and entered into a computerized case management system.
WARRANT DELIVERED TO SHERIFF TO BE SERVED		The Sheriff's Office receives Warrants from the Court Clerk. Warrant information is entered into the Sheriff's records management system. The Sheriff's Office maintains the physical Warrants and may receive queries from other counties regarding those Warrants.
WARRANT IS SERVED		Most Warrants are served by the Sheriff's Office. The Deputy may verify the Warrant and run a prior convictions query on the National Crime Intelligence Center (NCIC) before serving the Warrant. The Deputy serves the Warrant and updates the form with "who" and "when" it was served. The Deputy returns the Warrant to the Sheriff's Office where the computer record for the Warrant is updated with the corresponding details.
BOOKING		Booking is usually done at a county jail. Fingerprints are taken to provide identity, match criminal history, seek outstanding Warrants and obtain the State Identification (SID) Number from the TBI. LiveScan technology automates the fingerprinting process by sending it electronically to the TBI's Automated Fingerprint Identification System (AFIS). If the booking agency does not have LiveScan, they use paper fingerprint cards and sends two copies in the mail (one for the TBI, one for the FBI).
WARRANT SENT BACK TO COURT CLERK	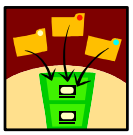	The Sheriff's Clerk files a copy of the Warrant, scans it into a digital imaging system, enters it into their records management system or shreds it. The Sheriff's Office sends the original Warrant back to the Court Clerk. The Court Clerk updates their system accordingly, physically files the Warrant by court date and awaits the court's final disposition.
CASE GOES TO COURT		In many cases a pre-sentence investigation is done and entered on TOMIS. The Court Clerk prints the docket and the case is heard. Once the verdict is determined, the disposition is captured by the clerk and entered into the case management system. After the trial, the Court Clerk must share the disposition information with the Arresting Agency, District Attorney and the Administrative Office of the Courts (AOC). The Arresting Agency is responsible for submitting the final disposition to the TBI.
CORRECTION		The Court Clerk sends the judgment order that contains the final disposition to the Department of Correction (TDOC). TDOC enters the inmate's information and judgment into Tennessee Offender Management Information System (TOMIS).
PROBATION AND PAROLE		Parolees are subject to the Board of Probation and Parole and to a Probation and Parole Officer (PPO). Probationers are subject to the Judge and a PPO. If there is a violation of Probation or Parole, the PPO writes a report, and files for an Arrest Warrant. The Deputy who serves the Warrant takes the parolee/ probationer to jail without bond. The PPO has 72 hours to notify the offender of detailed charges.

High-Level Information Systems Diagram

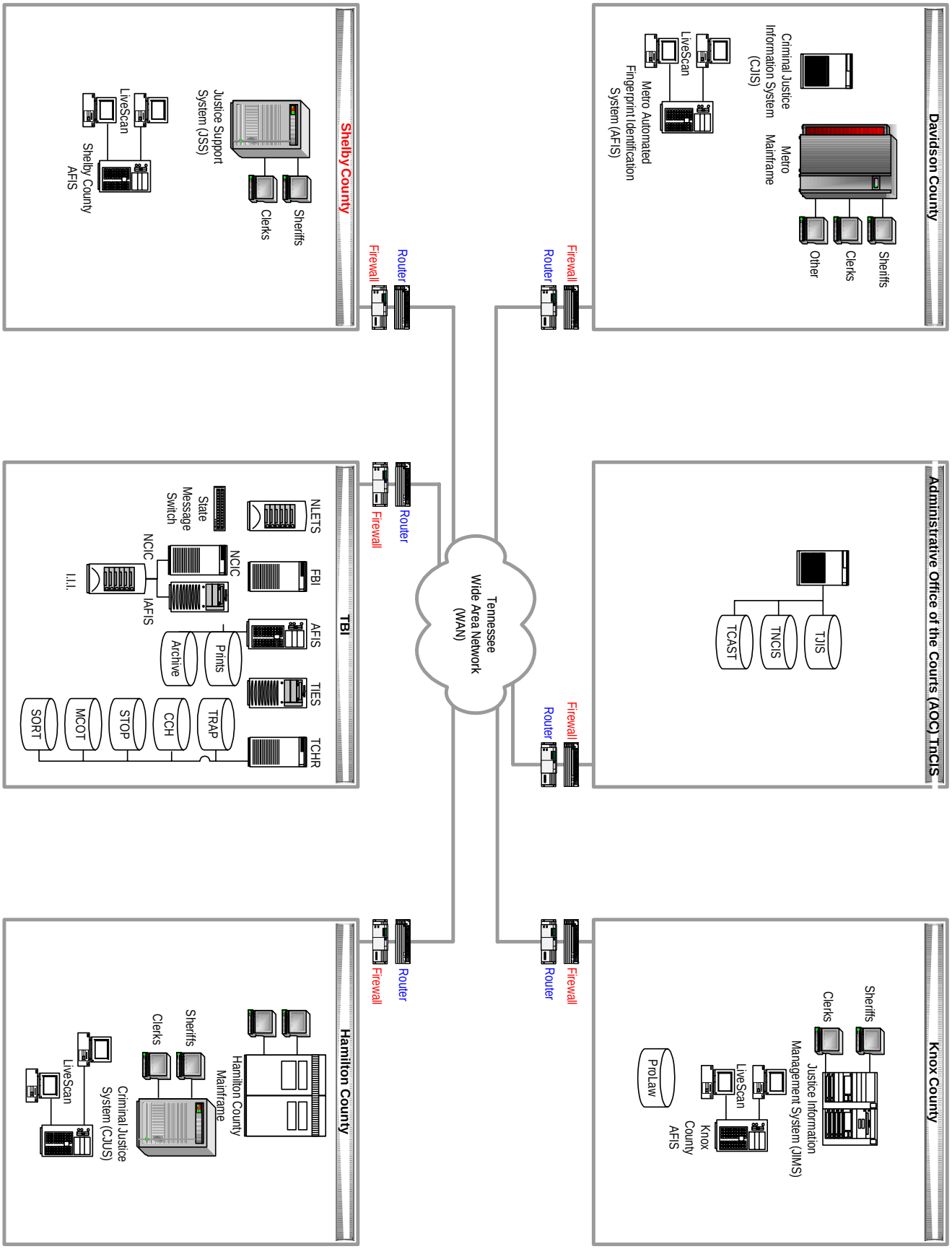

INCIDENT AND INVESTIGATION

Incident & Investigation: Process Diagram

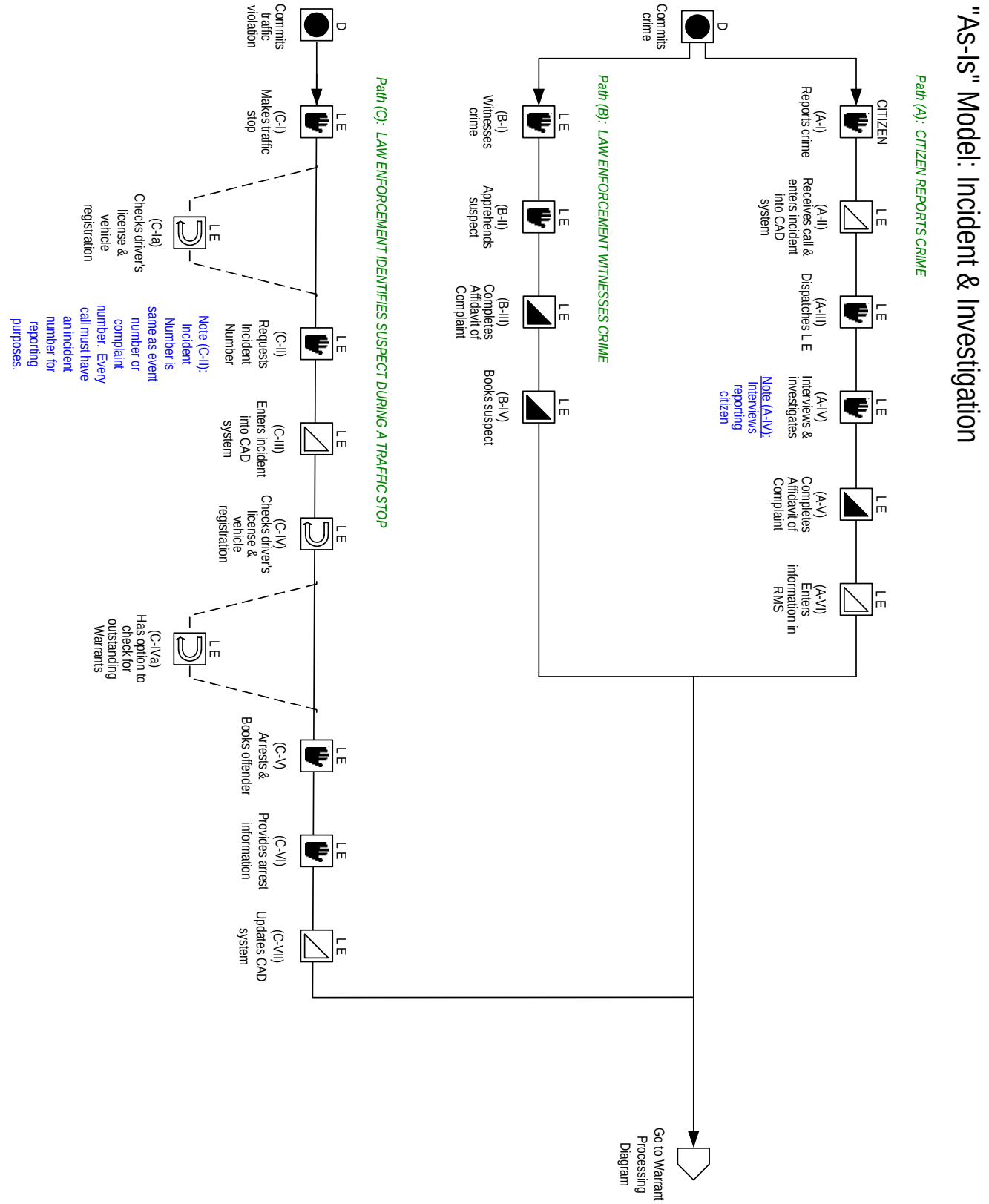

Incident & Investigation: Process Overview

The “Incident and Investigation” process is initiated when: (A) Citizen Reports Crime, (B) Law Enforcement Witnesses Crime, or (C) Law Enforcement Identifies Suspect during a Traffic Stop.

Key information exchange events that occur during the **Incident & Investigation** process are described below.

A. Citizen Reports Crime

I. CITIZEN REPORTS A CRIME TO A LAW ENFORCEMENT AGENCY

A Citizen contacts a Law Enforcement Agency to report that a crime has been committed or that a crime is in progress. The Citizen notifies the Law Enforcement Agency by either:

- Making a “911” telephone call
- Making a call to the Law Enforcement Agency’s listed telephone number.
- Reporting the incident to a Law Enforcement Officer in the vicinity of the incident
- Reporting the incident at the Law Enforcement Agency’s site/station

II. LAW ENFORCEMENT RECEIVES CALL AND ENTERS INCIDENT INTO CAD SYSTEM

When the Law Enforcement Dispatcher gets contacted about an incident, he/she gathers basic information and enters it into the Computer Aided Dispatch (CAD) system.

III. LAW ENFORCEMENT DISPATCHES OFFICER

The Dispatcher contacts a Law Enforcement Officer using the agency’s radio communications system and provides him with the information reported.

IV. LAW ENFORCEMENT OFFICER INTERVIEWS AND INVESTIGATES

When the Law Enforcement Officer arrives at the scene he/she interviews the reporting citizen and conducts an investigation. The Officer records the information reported by witnesses as well as his observations on an Incident Report. The Officer reviews the information collected and determines whether the incident merits further investigation. If the Officer deems that additional investigation is needed, he may conduct additional interviews with the citizen and other witnesses (if available) or further examine the incident area. The Officer will also gather material that appears to be evidence for the case. The evidence is returned to the Law Enforcement Agency where it is inventoried and cataloged. Evidence may be sent to another agency for additional analysis.

When the suspect(s) have been identified, the Officer will likely perform a background check. In this procedure, information about a suspect is queried from the statewide and federal Arrest Warrant databases (TRAP & NCIC), Tennessee’s Criminal History Repository, and the agency’s Records Management System. The background check provides insight on a suspect’s prior/existing Arrest Warrants, prior criminal convictions and charges, and Probation/Parole status. Information obtained from a background check often proves to be helpful in determining a suspect’s whereabouts. It may also influence the Law Enforcement Agency to request information about a suspect from other criminal justice agencies. These requests are typically initiated by phone or FAX and information is usually returned in a like manner.

If the Law Enforcement Officer determines that no crime has been committed or that there is not sufficient evidence to continue an investigation, he will document the reason for this decision on the Incident Report.

V. LAW ENFORCEMENT COMPLETES AFFIDAVIT OF COMPLAINT

If the Officer determines there is ample cause for an arrest, an Affidavit of Complaint is completed.

VI. LAW ENFORCEMENT ENTERS INFORMATION IN RECORDS MANAGEMENT SYSTEM

The Law Enforcement Officer submits a copy of the Incident Report to the Administrative/Records Management division of the Law Enforcement Agency. The administrative staff of the Law Enforcement Agency enters information contained on the Incident Report into the Law Enforcement Agency's Records Management System. The next step is Warrant Processing.

B. LAW ENFORCEMENT WITNESSES CRIME

I. LAW ENFORCEMENT WITNESSES CRIME

When a Law Enforcement Officer observes a crime, the Officer uses radio communications to report the incident to a Dispatcher and request assistance, if necessary.

II. LAW ENFORCEMENT APPREHENDS SUSPECT

The Law Enforcement Officer will attempt to apprehend, question and detain the suspect(s).

III. LAW ENFORCEMENT COMPLETES AFFIDAVIT OF COMPLAINT

If the offense calls for an arrest, the Law Enforcement Officer will take the suspect into custody and completes an AFFIDAVIT OF COMPLAINT. If the crime does not necessitate an arrest, the Officer will issue a Citation or Summons to the Offender to appear at a stated time and place.

IV. LAW ENFORCEMENT BOOKS SUSPECT

If the suspect is arrested, the Law Enforcement Officer transports the suspect to the designated Booking Agency for processing. The next step is Warrant Processing.

C. LAW ENFORCEMENT IDENTIFIES SUSPECT DURING A TRAFFIC STOP

I. LAW ENFORCEMENT MAKES TRAFFIC STOP

Law Enforcement Officers detain persons who commit traffic violations or have expired license plates. During these traffic stops, Law Enforcement Officers request the driver of the vehicle for his or her Driver's License and Vehicle Registration. If the driver of the vehicle is unable to produce these documents, the Law Enforcement Officer will ask for the driver's name and other basic identification information that would have been gathered from the Driver's License and/or Vehicle Registration. If the Driver does not produce a Driver's License and/or Vehicle Registration, the Law Enforcement Officer may issue a citation for these violations.

a. Checks driver's license and vehicle registration

If Law Enforcement Officer has a laptop or handheld computer, he/she will check driver's license and vehicle registration online using the information collected. This check verifies that driver is the owner of vehicle, as well as, if driver has any DUIs or is driving on a revoked license. If no such device is available, Officer can contact Dispatcher for query.

II. LAW ENFORCEMENT REQUESTS INCIDENT NUMBER

The Law Enforcement Officer calls the Dispatch office to request an Incident Number. The Incident Number is the same as an event number or complaint number. Every call must have an event number for reporting purposes.

III. LAW ENFORCEMENT ENTERS INCIDENT INTO CAD SYSTEM

The Law Enforcement Dispatcher enters incident information into Computer Aided Dispatch (CAD) system.

IV. LAW ENFORCEMENT CHECKS DRIVER'S LICENSE AND VEHICLE REGISTRATION

If the Law Enforcement Officer does NOT have an online device she/he will use radio communications to contact a Dispatcher and request the Dispatcher to query the Driver's status with the Department of Safety database. The Dispatcher will query to see if the driver has any DUIs or if driving with a revoked license.

a. Law Enforcement has option to check for outstanding Warrants

The Law Enforcement Officer has the option to have Dispatcher check for any outstanding Warrants on the local, TBI's TRAP or FBI's NCIC.

V. LAW ENFORCEMENT ARRESTS AND BOOKS OFFENDER

If the query indicates that a driver is a "wanted person," the Law Enforcement Officer takes the offender into custody and transports him to Booking for processing.

VI. LAW ENFORCEMENT PROVIDES ARREST INFORMATION

The Law Enforcement Officer contacts Dispatch and provides information regarding the arrest.

VII. LAW ENFORCEMENT UPDATES CAD SYSTEM

The Law Enforcement Dispatcher updates the CAD system with arrest information. The next step is Warrant Processing.

Incident & Investigation: Agency Roles & Responsibilities

Criminal justice agencies involved in the **Incident & Investigation** process and their information exchange responsibilities are listed below.

Department of Safety

- Provides Driver's History information to Law Enforcement Agencies.
- Provides Vehicle Registration information to Law Enforcement Agencies.

District Attorney General's Office

- Provides criminal history/background information to Law Enforcement Agencies.
- Reviews Affidavit of Complaint forms for probable cause (upon Law Enforcement Agency request).
- Assists in the completion of Affidavit of Complaint forms (upon Law Enforcement Agency request).

Law Enforcement Agency

- Keeps records of incidents/offenses.
- Records witness testimony and investigation findings.
- Collects and stores physical evidence.
- Checks criminal history and background of suspects and witnesses (if applicable).
- Completes and files Incident/Offense Reports.
- Provides information about cases, incidents, and/or Defendants to other Law Enforcement Agencies.
- Completes Affidavit of Complaint forms.

Tennessee Bureau of Investigation

- Provides state criminal history/background information to Law Enforcement Agencies and District Attorney's Offices.
- Provides information about existing Arrest Warrants to Law Enforcement Agencies and District Attorney's Offices.

Federal Bureau of Investigation

- Provides national criminal history/background information to Law Enforcement Agencies and District Attorney's Offices.
- Provides information about existing Arrest Warrants to Law Enforcement Agencies and District Attorney's Offices.

Incident & Investigation: Information Exchange

The Events that generate inter-agency Information Exchange within the **Incident & Investigation** process are shown in the table below.

Information Exchange during the Incident and Investigation Process

ID	EVENT	INFORMATION EXCHANGED	SEND AGENCY	RECEIVE AGENCY	METHOD	FREQ
	LEA Dispatcher or LEA Officer requests Driver's License and Vehicle Registration information from the Dept. of Safety.	Basic ID Data Name Data Driver's License Data Vehicle Data	LEA	Dept. of Safety	Electronic: Department of Safety computer system(s)	HIGH
	The Dept. of Safety returns Driver's License and Vehicle Registration information to a LEA.	Basic ID Data Driver's License Data Name Data Vehicle Data	Dept. of Safety	LEA	Electronic: Department of Safety computer system(s)	HIGH
	A LEA performs background and outstanding warrant checks.	Basic ID Data Name Data Personal ID Data	LEA	TBI	Electronic: Tennessee Criminal History Repository	HIGH
	Results of a background and outstanding warrant check are returned to a LEA.	Arrest Data Basic ID Data Disposition Data Enhanced ID Data Offense Data Name Data Personal ID Data Warrant Data	TBI	LEA	Electronic: Tennessee Criminal History Repository	HIGH

ID	EVENT	INFORMATION EXCHANGED	SEND AGENCY	RECEIVE AGENCY	METHOD	FREQ
	LEA requests information about a Defendant from Court Clerk's Office, District Attorney's, Office, Dept. of Correction, Board of Prob. and Parole, or another LEA.	Basic ID Data Enhanced ID Data Name Data Personal ID Data	LEA	Court Clerk District Attorney TDOC BOPP LEA	Paper: Form, Report, Fax, Other	LOW
	Court Clerk's Office returns information to a requesting LEA.	Address Data Arrest Data Case ID Data Charge Data Contact Data Custody Data Disposition Data Offense Data Payment Data Personal ID Data Probation Data Sentence Data	Court Clerk	LEA	Paper: Form, Report, Fax, Other	LOW
	District Attorney General's Office returns information to a requesting LEA.	Address Data Case ID Data Charge Data Contact Data Disposition Data Offense Data Plea Data Sentence Data	District Attorney	LEA	Paper: Form, Report, Fax, Other	LOW
	Department of Correction returns information to a requesting LEA.	Case ID Data Custody Data Disposition Data Fingerprint Data Medical Data Mug Shot Data Offense Data Sentence Data Release Data	TDOC	LEA	Paper: Form, Report, Fax, Other	LOW

ID	EVENT	INFORMATION EXCHANGED	SEND AGENCY	RECEIVE AGENCY	METHOD	FREQ
	Board of Probation & Parole returns information to a requesting LEA.	Address Data Case ID Data Contact Data Just. Official ID Data Medical Data Parole Data Personal ID Data Probation Data Social ID Data Violation Data	BOPP	LEA	Paper: Form, Report, Fax, Other	LOW
	LEA returns information to a requesting LEA.	Arrest Data Case ID Data Charge Data Custody Data Fingerprint Data Just. Official ID Data Mug Shot Data Offense Data Personal ID Data Release Data	LEA	LEA	Paper: Form, Report, Fax, Teletype, Other	LOW
	LEA requests advisement on probable cause from the Dist. Attorney's Office.	Arrest Data Basic ID Data Charge Data Name Data Offense Data	LEA	District Attorney	Paper: Affidavit of Complaint	LOW

Incident & Investigation: Data Elements

The data elements listed below are exchanged between multiple criminal justice agencies and are essential to the **Incident & Investigation** process. See APPENDIX B: DATA ELEMENTS for more details.

ADDR	**ADDRESS DATA**
ARRS	**ARREST DATA**
BASC	**BASIC IDENTIFICATION DATA**
CASE	**CASE IDENTIFICATION DATA**
CHRG	**CHARGE DATA**
CONT	**CONTACT DATA**
CUST	**CUSTODY DATA**
DISP	**DISPOSITION DATA**
DRIV	**DRIVER'S LICENSE DATA**
IDEN	**ENHANCED IDENTIFICATION DATA**
FING	**FINGERPRINT DATA**
JUST	**JUSTICE OFFICIAL IDENTIFICATION DATA**
MEDI	**MEDICAL DATA**
PHOT	**MUG SHOT DATA**
NAME	**NAME DATA**
OFFN	**OFFENSE DATA**
PARO	**PAROLE DATA**
PAYM	**PAYMENT DATA**
PERS	**PERSONAL IDENTIFICATION DATA**
PLEA	**PLEA DATA**
PROB	**PROBATION DATA**
RLSE	**RELEASE DATA**
SENT	**SENTENCE DATA**
SOCI	**SOCIAL IDENTIFICATION DATA**
VEHI	**VEHICLE DATA**
VIOL	**VIOLATION DATA**
WARR	**WARRANT DATA**

Incident & Investigation: Technology

The table below details the primary computer systems and databases used in exchange of information during the **Incident and Investigation** process. See Appendix D for more detailed information about computer systems and applications.

Incident and Investigation – Technology

NAME	DESCRIPTION
Court Information System (CIS)	A court information system is used to manage the daily affairs of the court clerk's office. It contains functionality for Case History, Master Person File, Bill-of-Cost, Case Disposition Rule & Execution, and Reporting System and generates a docket number. Maintained by: Court Clerk's Office
Computer Aided Dispatch (CAD) system	A system used by Law Enforcement to process telephone calls from the public, track calls for service, and facilitate the dispatch of Law Enforcement Officers to the scene of the incident. Maintained by: Law Enforcement Agency
Driver License History Database	The Driver History Database contains driver's license status and driver history information. Maintained by: Department of Safety
National Crime Intelligence Center (NCIC)	A computerized network that connects Law Enforcement Agencies throughout the United States and contains information about crimes that have occurred throughout the country. Criminal History and/or Arrest Warrant status information is commonly requested from NCIC. Maintained by: Federal Bureau of Investigation (FBI)
Records Management System (RMS)	A computer system that captures and stores information about a case and promotes an agency's ability to manage its records. Maintained by: Law Enforcement Agency, District Attorney's Conference/Offices
Tennessee Criminal History Repository (TCHR)	The Tennessee Criminal History Repository (TCHR) contains information about arrests, charges, and final dispositions of individuals who have committed offenses in Tennessee. Maintained by: Tennessee Bureau of Investigation (TBI)
Tennessee Offender Management Information System (TOMIS)	The computer system used by the Department of Correction and Board of Probation Parole to store and process information about sentencing, incarceration, release, Probation and Parole. The system tracks all activities of inmates, probationers and parolees. The Tennessee Department of Correction has recently implemented an Internet-based version of the software. Maintained by: Tennessee Department of Correction, Board of Probation and Parole
Titles & Registration Database	The Titles and Registration Database contains information about vehicle registrations as well as vehicles and their respective owners. Maintained by: Department of Safety

Incident & Investigation: Forms

The primary forms used during the Incident and Investigation process are summarized in the table below. An example of each form follows; however, there are variations of these forms used in different areas in Tennessee.

ID	FORM NAME	FORM DESCRIPTION
F-1	Affidavit of Complaint	A document that sets forth a criminal violation and serves as an instrument for filing for an Arrest Warrant.
F-2	Citation	A notice to a person that he or she is charged with a minor offense such as a traffic violation.
F-3	Citation in Lieu of Arrest	A notice to a person that he or she is charged with an offense that requires an appearance at the court on a specified day. Failure to appear results in an additional contempt of court charge.
F-4	Incident Report	An account of a law enforcement investigation containing information about a reported and/or observed violation of the law.

Affidavit of Complaint

GENERAL SESSIONS COURT OF _____ COUNTY TENNESSEE

State of Tennessee vs. _____

State Control # _____ _____ County Case # _____

Attorney for Defendant _____ Address _____
Court Date _____ _____
State, Deft. to _____ at _____am/pm Phone _____ DL# _____
State, Deft. to _____ at _____am/pm DOB _____ SSN#_____
State, Deft. to _____ at _____am/pm Sex____ Race____ Ht____ Wt____ Hair____ Eyes _____
State, Deft. to _____ at _____am/pm Work _____
State, Deft. to _____ at _____am/pm _____

AFFIDAVIT OF COMPLAINT

I, the affiant named below, after being sworn, state under oath that on or about _____ in _____ County, Tennessee, _____ committed the offense(s) of violation(s) of T.C.A. § _____. I further state under oath that the essential facts constituting the offense(s), the sources of my information and the reasons why this information is believable and reliable are as follows:

Affiant's Signature: _____

Name (Printed): _____

Address (Printed): _____

_____

Phone Number: _____

Sworn to and subscribed before me on

_____, 20____

_____
Judge/Clerk/Judicial Commissioner

PROBABLE CAUSE DETERMINATION

Based on the affidavit of complaint, I find there is probable cause to believe that on the date set forth above in_____ County, Tennessee the defendant committed the offense(s) of violation(s) of TCA § _____

_____

( ) Defendant given citation or arrested without warrant ( ) Arrest warrant shall issue ( ) Criminal summons shall issue

Date _____ Judge/Clerk/Judicial Commissioner _____

Citation

TENNESSEE MULTIPLE OFFENSE CITATION 01826

THE NUMBER OF MOVING VIOLATIONS THIS CITATION _____ + NON-MOVING _____ = TOTAL _____ (MAX. 5)

THE UNDERSIGNED BEING DULY SWORN UPON HIS OATH DEPOSES:

ON _____ THE _____ DAY OF _____ 19 ___ / 20 ___ | TIME | A.M. / P.M. | SEX | RACE | TN RES / YES NO

VIOLATOR

NAME (FIRST / MIDDLE / LAST) | D.O.B. MONTH / DAY / YEAR

ADDRESS | CITY | STATE | ZIP CODE

SOCIAL SECURITY NUMBER | DRIVER'S LICENSE NUMBER | DL CLASS | STATE | EXPIRATION DATE MONTH / DAY / YEAR

VEHICLE

OWNED / CARRIER / LEASED | NAME | BUSINESS ADDRESS | CMV | HAZ MAT | ACC. | MC

DID UNLAWFULLY OPERATE PARK A MOTOR VEHICLE

MAKE | MODEL | 26,001 LBS. OR GREATER | YES | YEAR | COLOR | LICENSE PLATE NO. | STATE | YEAR

LOC

UPON STREET/HWY | CITY/COUNTY

DIRECTION: NORTH / EAST / SOUTH / WEST

HWY TYPE: 2-L 1 / 3-L 2 / 4-L 3 / DIV 4 / I-RD 5

AREA: BUS. 1 / SCHOOL 2 / RES. 3 / RURAL 4 / CONST. 5

VIOLATION

AFORESAID DID THEN AND THERE COMMIT THE FOLLOWING OFFENSE(S):

TCA 55-8- _____ [ ] A | RADAR 02 | OTHER 04

SPEEDING _____ MPH IN _____ ZONE [ ] | PACING 03 | LASER 05

TCA 55-10-205 002 RECKLESS DRIVING	B	TCA 55-8- _____ TRAFFIC CONTROL DEVICE/SIGNAL	H	TCA 55-4- _____ REGISTRATION VIOL. _____	O	OTHER 2 TCA	Y
TCA 55-8- _____ IMPROPER PASSING	C	TCA 55-8-124 006 FOLLOWING TOO CLOSE	I	TCA 55-8-188 019 HOV LANE VIOLATION	P		
TCA 55-50- _____ DL VIOL. _____	D	TCA 55-10-416 199 OPEN CONTAINER	K	TCA 55-9- _____ LIGHT LAW	S	OTHER 3 TCA	Z
TCA 55-9-202 106 MUFFLER LAW	E	TCA 55-9-107 199 WINDOW TINT	L	OTHER 1 TCA	T		
TCA 55-9- _____ SEATBELT LAW _____	G	TCA 55-9-602 393 CHILD RESTRAINT DEVICE	M				

NARRATIVE:

OFFICER

ID# D

THIS _____ DAY OF _____ 19 ___ / 20 ___ | RANK | OFFICER NAME (PRINT)

SWORN AND SUBSCRIBED BEFORE ME THIS _____ DAY OF _____ 19 ___ / 20 ___

SIGNATURE OF OFFICER | JUDGE/CLERK

COURT

IN THE: 1 GENERAL SESSIONS COURT OF: _____ COUNTY NO. _____ CITY NO.

6 JUVENILE COURT OF:

OTHER _____ OF:

ON THE _____ DAY OF _____ 19 _____ / 20 _____ | TIME A.M. / P.M.

Citation in Lieu of Arrest

RECEIPT NO. _____ DOCKET NO. _____ NO. _____

STATE OF TENNESSEE – CITY OF SOMERVILLE
P. O. BOX 909 – SOMERVILLE, TN 38068
901-465-3205

☐ **SOMERVILLE MUNICIPAL COURT**
LOCATED IN SOMERVILLE POLICE DEPT.

Nº 18750

☐ **GENERAL SESSIONS**
FAYETTE COUNTY COURTHOUSE 901-465-5205

IN THE CITY OF **SOMERVILLE**

THE UNDERSIGNED, BEING DULY SWORN, UPON HIS, OATH DEPOSES:

ON _____ THE _____ DAY OF _____ 20 ____ TIME _____ ☐ PM

NAME _____
FIRST M.I. LAST

STREET _____

CITY/
STATE _____ ZIP _____

DRIVER
LIC. NO _____

TYPE/
CLASS _____ STATE _____ EXP. DATE _____

D.O.B. ____/____/____

RACE _____ SEX ____

TN RESIDENT? YES ☐

DID UNLAWFULLY OPERATE/PARK: VEHICLE LICENSE NO. _____ YR. _____ STATE _____

VEHICLE DESCRIPTION YR. _____ MAKE _____ STYLE _____ COLOR _____

UPON
STREET OR HIGHWAY _____ ☐N ☐S ☐W OF _____
NAME/ROUTE #

AFORESAID DID THEN AND THERE COMMIT THE FOLLOWING OFFENSE:

☐ SPEEDING _____ MHP IN _____ SPEED LIMIT _____ LASER ☐ RADAR ☐ PACING
☐ LIGHT LAW ☐ NO DRIVER LICENSE
☐ TRAFFIC CONTROL ☐ SUSPENDED/REVOKED DL ☐ ACCIDENT
☐ SEATBELT ☐ REGISTRATION LAW
☐ FINANCIAL RESPONSIBILITY ☐ CHILD RESTRAINT HIGHWAY TYPE: ☐ 2-LANE
☐ FAILURE TO YIELD ☐ CITY STREET
☐ DUI BAC_____ ☐ 4-LANE
☐ OTHER_____ AREA: ☐ BUSINESS
☐ TCA:_____ ☐ RESIDENTIAL
☐ SCHOOL

THE UNDERSIGNED FURTHER STATES THAT HE/SHE HAS JUST AND REASONABLE GROUNDS TO BELIEVE AND DOES BELIEVE, THAT THE PERSON NAME ABOVE COMMITTED THE OFFENSE HEREIN SET FORTH, CONTRARY TO LAW.

THIS _____ DAY OF_____ 20 ____ _____
BADGE NO._____ RANK AFFIANT

YOU ARE COMMANDED TO APPEAR IN THE ABOVE DESIGNATED COURT

ON THE _____ DAY OF_____ 20 _____ AT_____ ☐ PM

☐ FINE MAY BE PAID BEFORE COURT ☐ YOU MUST APPEAR

OFFICER OFFICER CAR

I UNDERSTAND THE ABOVE NOTICE, I ACCEPT THIS CITATION IN LIEU OF ARREST AND AGREE TO APPEAR AS DIRECTED OR TO SUBMIT THE FINE AND COST TO THE CLERK OF THE COURT BEFORE THE COURT DATE. I ALSO UNDERSTAND THAT FAILURE TO APPEAR AS ORDERED IN PUNISHABLE AS CONTEMPT OF COURT. MY SIGNATURE IS NOT ADMISSION OF GUILT.

SIGNATURE

Incident Report

ORI# TN 0330100

CHATTANOOGA POLICE DEPARTMENT INCIDENT REPORT

PAGE 1 OF 5

OFFENSE LOCATION | SHIFT | DISTRICT | DATE REPORTED | TIME REPORTED | COMPLAINT NUMBER

INCIDENT

OFFENSE 1 | TIBRS CODE 1 | DATE OCCURRED | TIME OCCURRED | REPORTING OFFICER | Employee # | BADGE #

Offense Status: O Attempted O Completed
Offender Used (mark all that apply): O Alcohol O Drugs O Computer Equip. O Not Applicable
Location Type
Burglary Only: O F Forcible Entry O N No Force | # Of Premises Entered
Type Criminal Activity
Type Weapon / Force (indicate if automatic weapon): O Auto O Auto O Auto
Bias Motivation

Gang Activity | Gang Type | Gang Name: O Suspected O Known Name
Gang Activity | Gang Type | Gang Name: O Suspected O Known Name
Home Invasion: O YES O N

VICTIM

PERSON 1 TYPE: B O P O R O W O | NOTE: If victim, go to victim section. NAME (LAST, FIRST, MIDDLE) | SEX | RACE | D.O.B. | AGE | RESIDENCE PHONE ( ) | BUSINESS PHONE ( )

RESIDENCE ADDRESS | EMPLOYER NAME / ADDRESS | ADDITIONAL PERSONS: O YES O NO

MO / INFORMATION

Place of Action: O 1 Structure O 2 Vehicle O 3 Street/Alley O 4 Lot/Park/Yard O 5 Other

Surrounding Area: O 1 Residential O 2 Business O 3 Industrial / Mfg. O 4 Recreational O 5 Institutional O 6 Open Space O 7 Other

Type of Structure
Non-Residence: O 1 Convenience... O 2 Drug O 3 Medical O 4 Financial O 5 Construction O 6 Other Retail O 7 Public Building O 8 Restaurant / Bar O 9 Transportation O 10 Wholesale O 11 Fast Food
Residence: O 12 Apartment O 13 Duplex O 14 Hotel / Motel O 15 House O 16 Mobile / Camper O 17 Townhouse O 18 Other

Suspected Target(s): O 1 Cash Register O 2 Display Items O 3 Person O 4 Safe / Box O 5 Sales Area O 6 Vending Machine O 7 Attic O 8 Basement O 9 Bathroom O 10 Bedroom O 11 Den O 12 Family Room O 13 Garage / Carport O 14 Auto O 15 Kitchen O 16 Living Room O 17 Storage O 18 Other

Point of:

Entry	Exit
O 1 Unknown	O
O 2 Front	O
O 3 Garage	O
O 4 Rear	O
O 5 Side	O
O 6 Door	O
O 7 Duct	O
O 8 Roof	O
O 9 Trunk	O
O 10 Wall	O
O 11 Window	O
O 12 Other	O
O 13 Floor	O
O 14 Hood	O
O 15 Vent	O

Methods: O 1 Survey O 2 Customer O 3 Delivery Person O 4 Disabled Motorist O 5 Drunk O 6 Employee / Employer O 7 Friend O 8 Sick / Injured O 9 Use Phone O 10 Police / Law O 11 Renter O 12 Repairman O 13 Salesman O 14 Seeking Assistance O 15 Directions O 16 Relative O 17 Seeking O 18 Selling O 19 Soliciting O 20 Other

Security Used: O 1 Alarm O 2 Bar / Grate O 3 Dog O 4 Exterior Light O 5 Guard O 6 Interior Light O 7 Locked Doors O 8 Locked Windows O 9 Neighbor / Watch O 10 Phone / Camera O 11 Fence O 12 Other

Offender Actions: O 1 Unknown O 2 Bound Person O 3 Blindfolded Person O 4 Child Molest O 5 Demand Cash O 6 Demand Jewelry O 7 Disabled Phone O 8 Ate / Drank O 9 Hideout O 10 Injured Person O 11 Sex Acts O 12 Ransacked O 13 Raped O 14 Smoked O 15 Took Money O 16 Took Tools O 17 Took TV O 18 Took Stereo O 19 Took Vehicle O 20 Threats O 21 Had Lookout O 22 Demand Note O 23 Forced Entry O 24 Used Matches O 25 Stolen Vehicle O 26 Used Tools O 27 Vandalized O 28 Vehicle Needed O 29 Was Neat O 30 Snatched Purse O 31 Other

Evidence: O 1 Blood O 2 Bullet / Casing O 3 Clothing O 4 Fingerprint O 5 Hair O 6 Photographs O 7 Semen O 8 Stains O 9 Tools O 10 Weapons O 11 Fiber O 12 Other

Location Of Evidence: O 1 Property Room O 2 ID Division O 3 Badge # _____ O 4 Receipt # _____ O 5 Other _____

A. Weather Conditions: O 1 Clear O 2 Cloudy O 3 Fog O 4 Rain O 5 Snow

B. Light Conditions: O 1 Daylight O 2 Dark O 3 Street Light On O 4 Street Light Off O 5 No Street Lights

C. Reported By: O 1 Police O 2 Security Guard O 3 Owner O 4 Citizen O 5 Burglar Alarm O 6 Other

D. Action Visible From: O 1 Adjacent Street O 2 Alley O 3 Street O 4 Not Visible

DESCRIPTION / DISPOSITION OF EVIDENCE

NARRATIVE

INCLUDE THE FOLLOWING IN NARRATIVE: Day, Date, Time, Officer, Type Response, Location, Type Call, Names (Reporting Person, Victims, Offenders, Witnesses), All Offenses, Case Status.

CASE STATUS: O CLEARED BY ARREST O CLEARED BY JUV. ARREST O UNFOUND O PENDING O CLEARED EXCEPT. O STAT 1 O STAT 2 O CIVIL

EXCEPTIONAL CLEARANCE REASON: O A. DEATH OF OFFENDER O D. VICTIM REFUSED TO COOPERATE O B. PROSECUTION DECLINED O E. JUVENILE, NO CUSTODY O C. EXTRADITION DECLINED O N. NOT APPLICABLE CLEARANCE DATE:

DOMESTIC VIOLENCE	TOTAL VICTIMS	TOTAL OFFENDERS	TOTAL ARRESTED	TOTAL OFFENSES
O YES O NO		O No Info. Avail.		

REVIEWING SUPERVISOR	SUP. BADGE	DATE RECEIVED	TIME RECEIVED	I.D. ASSIGNED	I.D. CAR#	INVESTIGATOR ASSIGNED	INVESTIGATOR CAR#
				O YES O NO		O YES O NO	

Incident Report (Continued)

REPORT DATE: _____ COMPLAINT NO.: _____

COMP/WITNESS

PERSON 2 TYPE (D C O R W)	NAME (LAST, FIRST, MIDDLE)	SEX	RACE	D.O.B.	AGE	RESIDENCE PHONE	BUSINESS PHONE
	RESIDENCE ADDRESS	EMPLOYER NAME / ADDRESS					
PERSON 3 TYPE (D P R W O O O O)	NAME (LAST, FIRST, MIDDLE)	SEX	RACE	D.O.B.	AGE	RESIDENCE PHONE	BUSINESS PHONE
	RESIDENCE ADDRESS	EMPLOYER NAME / ADDRESS					

PROPERTY SECTION

UR CODE	QUANTITY	DESCRIPTION (BRAND, COLOR, MODEL, SERIAL ID, ETC.)	PROP LOSS CODE	VALUE	RECOVERED QUANTITY	CATEGORY CODE	RECOVERED VALUE	DATE RECOVERED

IF THE OFFENSE IS ARSON AND THE PROPERTY WAS A STRUCTURE, WAS THE STRUCTURE OCCUPIED? O YES O NO O N/A MORE PROPERTY? O YES O NO

TYPE OF PROPERTY LOSS CODE (enter the number in property loss code box for this report)
1 None; 2 Burned; 3 Counterfeited / Forged; 4 Destroyed / Damaged; 5 Recovered; 6 Seized; 7 Stolen; 8 Unknown

UR CODE (enter the number in UR code column above)
01 Currency; 02 Jewelry; 03 Clothing / Furs; 04 Motor Vehicles; 05 Office Equipment; 06 TV, Radio, Camera, Etc.; 07 Firearms; 08 Household Goods; 09 Consumable Goods; 10 Livestock; 11 Miscellaneous

PROPERTY CATEGORY CODE (enter the number in category code column above)
01 Aircraft; 02 Alcohol; 03 Automobiles; 04 Bicycles; 05 Buses; 06 Clothes / Furs; 07 Computer Hardware / Software; 08 Consumable Goods; 09 Credit / Debit Cards; 10 Drugs / Narcotics; 11 Drug / Narcotic Equipment; 12 Farm Equipment; 13 Firearms; 14 Gambling Equipment; 15 Heavy Const./Ind.Equipment; 16 Household Goods; 17 Jewelry / Precious Metals; 18 Livestock; 19 Merchandise; 20 Money; 21 Negotiable Instruments; 22 Non-Negotiable Inst.; 23 Office Type Equipment; 24 Other Motor Vehicles; 25 Purses / Handbags / Wallets; 26 Radios / TVs / VCRs; 27 Recordings - Audio / Visual; 28 Recreational Vehicles; 29 Structures - Single Occ. Dwellings; 30 Structures - Other Dwellings; 31 Structures - Other Commercial / Business; 32 Structures - Industrial / Manufacturing; 33 Structures - Public / Community; 34 Structures - Storage; 35 Structures - Other; 36 Tools; 37 Trucks (Used to transport cargo comm.); 38 Vehicle Parts / Accessories; 39 Watercraft; 77 Other (Not fitting any other codes); 88 Pending Inventory; 99 Blank (Certain types of property)

VEHICLE

LICENSE NUMBER	LIC. STATE	LIC. YEAR	VEHICLE IDENTIFICATION NUMBER	INSURANCE CO./AGENT	INS. CO./AGENT PHONE

TITLE NUMBER	VEH. YR.	MAKE	MODEL	STYLE	COLOR	LIEN HOLDER	LIEN HOLDER PHONE

VALUE	PAST DUE NOTE	REPOSSESSED	TOW FORM	TYPE TOW / NO TOW	POLICE HOLD	WRECKER COMPANY OR DRIVER/OWNER	ENGINE SIZE
	O YES O NO	O YES O NO	O YES O NO		O YES O NO		

O STOLEN
O RECOVERED NIC# CONTROL #

TOTAL # STOLEN | TOTAL # RECOVERED | ADDITIONAL VEHICLE INFORMATION

DRUGS

SUSPECTED DRUG TYPE
A Crack Cocaine; B Cocaine (Other); C Hashish; D Heroin; E Marijuana; F Morphine; G Opium; H Other Narcotics; I LSD; J PCP; K Other Hallucinogen; L Amphet./Methamphet; M Other Stimulants; N Barbiturates; O Other Depressants; P Other Drugs; U Unknown Type; X Over Three (3)

#	SUSPECTED DRUG TYPE	ESTIMATED QUANTITY	MEASUREMENT
1			
2			
3			

MEASUREMENT
GM Gram; KG Kilogram; OZ Ounce; LB Pound; ML Milliliter; LT Liter; FO Fluid Ounce; GL Gallon; DU Dosage Unit; NP Number of Plants; XX Not Reported

IF MARIJUANA, COMPLETE THE FOLLOWING
O INDOOR; O OUTDOOR; O BOTH
NUMBER OF PLOTS | LATITUDE | LONGITUDE

VICTIM SECTION

VICTIM 1

NAME (LAST, FIRST, MIDDLE)	SEX	RACE	D.O.B.	AGE	RESIDENCE PHONE	MARITAL STATUS

PERMANENT ADDRESS	EMPLOYER NAME	BUSINESS PHONE

BUSINESS ADDRESS	VICTIM OF OFFENSE #'S (1 2 3 4 5 6 7 8 9 10)	VICTIM TYPE	ETHNICITY (OH ON OU)	RESIDENT STATUS (ON OR OU)

AGG ASSAULT/HOMICIDE	J/HOM.	INJURY TYPE (UP TO 5) (B L N T / M O U)	RELATIONSHIP OF VICTIM TO OFFENDER (CODE) (OFFENDER 1 / 2 / 3)	LEOKA INCIDENT	LEOKA ASSIGN.	LEOKA ACTIVITY

NAME OF COLLEGE	OFFENSE ON CAMPUS	(For University Use Only)	DOMESTIC VIOLENCE	TRANSPORT/SAFE PLACE	VIO. ORDER OF PROT
	O YES O NO	O STUDENT O GUARD O FACULTY O OTHER	O YES O NO	O YES O NO	O YES O NO

VICTIM 2

NAME (LAST, FIRST, MIDDLE)	SEX	RACE	D.O.B.	AGE	RESIDENCE PHONE	MARITAL STATUS

PERMANENT ADDRESS	EMPLOYER NAME	BUSINESS PHONE

BUSINESS ADDRESS	VICTIM OF OFFENSE #'S (1 2 3 4 5 6 7 8 9 10)	VICTIM TYPE	ETHNICITY (OH ON OU)	RESIDENT STATUS (ON OR OU)

AGG ASSAULT/HOMICIDE	J/HOM.	INJURY TYPE (UP TO 5) (B L N T / M O U)	RELATIONSHIP OF VICTIM TO OFFENDER (CODE) (OFFENDER 1 / 2 / 3)	LEOKA INCIDENT	LEOKA ASSIGN.	LEOKA ACTIVITY

NAME OF COLLEGE	OFFENSE ON CAMPUS	(For University Use Only)	DOMESTIC VIOLENCE	TRANSPORT/SAFE PLACE	VIO. ORDER OF PROT
	O YES O NO	O STUDENT O GUARD O FACULTY O OTHER	O YES O NO	O YES O NO	O YES O NO

VICTIM 3

NAME (LAST, FIRST, MIDDLE)	SEX	RACE	D.O.B.	AGE	RESIDENCE PHONE	MARITAL STATUS

PERMANENT ADDRESS	EMPLOYER NAME	BUSINESS PHONE

BUSINESS ADDRESS	VICTIM OF OFFENSE #'S (1 2 3 4 5 6 7 8 9 10)	VICTIM TYPE	ETHNICITY (OH ON OU)	RESIDENT STATUS (ON OR OU)

AGG ASSAULT/HOMICIDE	J/HOM.	INJURY TYPE (UP TO 5) (B L N T / M O U)	RELATIONSHIP OF VICTIM TO OFFENDER (CODE) (OFFENDER 1 / 2 / 3)	LEOKA INCIDENT	LEOKA ASSIGN.	LEOKA ACTIVITY

NAME OF COLLEGE	OFFENSE ON CAMPUS	(For University Use Only)	DOMESTIC VIOLENCE	TRANSPORT/SAFE PLACE	VIO. ORDER OF PROT
	O YES O NO	O STUDENT O GUARD O FACULTY O OTHER	O YES O NO	O YES O NO	O YES O NO

Incident Report (Continued)

C.P.D. INCIDENT REPORT CONTINUATION

PAGE 3 OF 5

ORI# TN 0330100 | Report Date : | Employee #: | Badge #: | Complaint Number : [ ]—

OFFENDER SECTION

OFFENDER 1

NAME (LAST, FIRST, MIDDLE) | SEX | RACE | D.O.B. | AGE | HGT | WGT | BUILD | HAIR | EYES | SOCIAL SECURITY NUMBER

RESIDENCE ADDRESS | EMPLOYER NAME / ADDRESS | DRIVER LICENSE | STATE

FURTHER DESCRIPTION (ALIAS NAMES, CLOTHING, GLASSES, SCARS, TATTOOS, MANNERS)

DISTINCTIVE STATEMENTS / ADDITIONAL INFORMATION | ARRESTED O YES O NO | PROSECUTE O YES O NO

OFFENDER 2

NAME (LAST, FIRST, MIDDLE) | SEX | RACE | D.O.B. | AGE | HGT | WGT | BUILD | HAIR | EYES | SOCIAL SECURITY NUMBER

RESIDENCE ADDRESS | EMPLOYER NAME / ADDRESS | DRIVER LICENSE | STATE

FURTHER DESCRIPTION (ALIAS NAMES, CLOTHING, GLASSES, SCARS, TATTOOS, MANNERS)

DISTINCTIVE STATEMENTS / ADDITIONAL INFORMATION | ARRESTED O YES O NO | PROSECUTE O YES O NO

OFFENDER 3

NAME (LAST, FIRST, MIDDLE) | SEX | RACE | D.O.B. | AGE | HGT | WGT | BUILD | HAIR | EYES | SOCIAL SECURITY NUMBER

RESIDENCE ADDRESS | EMPLOYER NAME / ADDRESS | DRIVER LICENSE | STATE

FURTHER DESCRIPTION (ALIAS NAMES, CLOTHING, GLASSES, SCARS, TATTOOS, MANNERS)

DISTINCTIVE STATEMENTS / ADDITIONAL INFORMATION | ARRESTED O YES O NO | PROSECUTE O YES O NO

1 2 3 HAIR LENGTH	1 2 3 HAIR STYLE	1 2 3 COMPLEXION	1 2 3 FACIAL HAIR	1 2 3 GEN. APPEARANCE	1 2 3 DISTINGUISHER	1 2 3 TEETH	1 2 3 SPEECH
1 Unknown	1 Unknown	1 Unknown	1 Unknown	1 Unknown	1 Unknown		1 Unknown
2 Bald	2 Afro/Nat.	2 Acne	2 Clean Shaven	2 Conservative	2 Angry	1 Missing All	2 Accent
3 Short	3 Braided	3 Dark	3 Full Beard	3 Dirty	3 Apologetic	2 Missing Some	3 Lisps
4 Collar	4 Bushy	4 Freckled	4 Fu Manchu	4 Disguise	4 Calm	3 Stain/Decay	4 Mumbles
5 Shoulder	5 Greasy	5 Light	5 Goatee	5 Flashy	5 Disorganized	4 False	5 Offensive
6 Long	6 Military	6 Medium	6 Lower Lip	6 Handsome	6 Irrational	5 Gold Visible	6 Quiet
7 Other	7 Ponytail	7 Pale	7 Mustache	7 Military	7 Nervous	6 Silver Visible	7 Rapid
	8 Processed	8 Pocked	8 Non/Fuzz	8 Unkept	8 Polite	7 Protruding	8 Slow
1 2 3 TYPE	9 Straight	9 Ruddy	9 Sideburns	9 Unusual Odor	9 Professional	8 Good	9 Stutters
1 Unknown	10 Wavy/Curly	10 Sallow	10 Unshaven	10 Well Groomed	10 Stupor	9 Front Gap	10 Talkative
2 Coarse	11 Wig	11 Tanned	11 Van Dyke	11 Other	11 Violent	10 Other	11 Other
3 Fine	12 Other	12 Other	12 Other		12 Other		
4 Thick							
5 Thinning							
6 Wiry							
7 Other							

OFFENDER / SUSPICIOUS VEHICLE 1 — OCCUPIED BY OFFENDER NUMBER(S) O 1 O 2 O 3

YEAR | MAKE | MODEL | STYLE | COLOR | LICENSE NUMBER | LICENSE STATE | IMPOUNDED O YES O NO | WHERE HELD

ADDITIONAL VEHICLE INFORMATION

OFFENDER / SUSPICIOUS VEHICLE 2 — OCCUPIED BY OFFENDER NUMBER(S) O 1 O 2 O 3

YEAR | MAKE | MODEL | STYLE | COLOR | LICENSE NUMBER | LICENSE STATE | IMPOUNDED O YES O NO | WHERE HELD

ADDITIONAL VEHICLE INFORMATION

ARRESTEE SECTION

ARRESTEE 1

ARREST OF OFFENDER # ____

ARREST DATE | TYPE OF ARREST O O O S O T | MULTIPLE CLEARANCE O C O M O N | TIBRS ARREST CODE | ARMED WITH (indicate if automatic weapon) O Auto O Auto | AGE | SEX | RACE | ETHNICITY O H O N O U

RESIDENT STATUS O N O R O U | DISPOSITION OF ARRESTEE UNDER 18 O H HANDLED WITHIN DEPT. RELEASED O R REFERRED TO JUV COURT/PROBATION | CLEARANCE INDICATOR O YES, CLEARS CASE O NO, ALREADY CLEARED | WARRANT SIGNED BY O OFFICER O VICTIM O BOTH

OFFENSE NUMBERS ASSOCIATED WITH THIS ARRESTEE O 1 O 2 O 3 O 4 O 5 O 6 O 7 O 8 O 9 O 10 | TRANSACTION NUMBER _ _ _ _ _ _ _ _ _ _ | TBI DOCUMENT CONTROL # _ _ _ _ _ _ _ _ _ _

ARRESTEE 2

ARREST OF OFFENDER # ____

ARREST DATE | TYPE OF ARREST O O O S O T | MULTIPLE CLEARANCE O C O M O N | TIBRS ARREST CODE | ARMED WITH (indicate if automatic weapon) O Auto O Auto | AGE | SEX | RACE | ETHNICITY O H O N O U

RESIDENT STATUS O N O R O U | DISPOSITION OF ARRESTEE UNDER 18 O H HANDLED WITHIN DEPT. RELEASED O R REFERRED TO JUV COURT/PROBATION | CLEARANCE INDICATOR O YES, CLEARS CASE O NO, ALREADY CLEARED | WARRANT SIGNED BY O OFFICER O VICTIM O BOTH

OFFENSE NUMBERS ASSOCIATED WITH THIS ARRESTEE O 1 O 2 O 3 O 4 O 5 O 6 O 7 O 8 O 9 O 10 | TRANSACTION NUMBER _ _ _ _ _ _ _ _ _ _ | TBI DOCUMENT CONTROL # _ _ _ _ _ _ _ _ _ _

ARRESTEE 3

ARREST OF OFFENDER # ____

ARREST DATE | TYPE OF ARREST O O O S O T | MULTIPLE CLEARANCE O C O M O N | TIBRS ARREST CODE | ARMED WITH (indicate if automatic weapon) O Auto O Auto | AGE | SEX | RACE | ETHNICITY O H O N O U

RESIDENT STATUS O N O R O U | DISPOSITION OF ARRESTEE UNDER 18 O H HANDLED WITHIN DEPT. RELEASED O R REFERRED TO JUV COURT/PROBATION | CLEARANCE INDICATOR O YES, CLEARS CASE O NO, ALREADY CLEARED | WARRANT SIGNED BY O OFFICER O VICTIM O BOTH

OFFENSE NUMBERS ASSOCIATED WITH THIS ARRESTEE O 1 O 2 O 3 O 4 O 5 O 6 O 7 O 8 O 9 O 10 | TRANSACTION NUMBER _ _ _ _ _ _ _ _ _ _ | TBI DOCUMENT CONTROL # _ _ _ _ _ _ _ _ _ _

Incident Report (Continued)

REPORT DATE: _____ COMPLAINT NO.: [ ] PAGE 4 OF 5

ADDITIONAL OFFENSES

OFFENSE 2 — TIBRS CODE 2

Offense 2 Status	Offender Used (mark all that apply)	Location Type	Burglary Only:	# Of Premises Entered	Type Criminal Activity	Type Weapon / Force (mark if automatic weapon)	Bias Motivation
O Attempted O Completed	O Alcohol O Drugs O Computer Equip. O Not Applicable		O F Forcible Entry O N No Force			O Auto O Auto O Auto	

Gang Activity	Gang Type	Gang Name	Gang Activity	Gang Type	Gang Name	Home Invasion
		O Suspected O Known Name			O Suspected O Known Name	O YES O NO

OFFENSE 3 — TIBRS CODE 3

Offense 3 Status	Offender Used (mark all that apply)	Location Type	Burglary Only:	# Of Premises Entered	Type Criminal Activity	Type Weapon / Force (mark if automatic weapon)	Bias Motivation
O Attempted O Completed	O Alcohol O Drugs O Computer Equip. O Not Applicable		O F Forcible Entry O N No Force			O Auto O Auto O Auto	

Gang Activity	Gang Type	Gang Name	Gang Activity	Gang Type	Gang Name	Home Invasion
		O Suspected O Known Name			O Suspected O Known Name	O YES O NO

OFFENSE 4 — TIBRS CODE 4

Offense 4 Status	Offender Used (mark all that apply)	Location Type	Burglary Only:	# Of Premises Entered	Type Criminal Activity	Type Weapon / Force (mark if automatic weapon)	Bias Motivation
O Attempted O Completed	O Alcohol O Drugs O Computer Equip. O Not Applicable		O F Forcible Entry O N No Force			O Auto O Auto O Auto	

Gang Activity	Gang Type	Gang Name	Gang Activity	Gang Type	Gang Name	Home Invasion
		O Suspected O Known Name			O Suspected O Known Name	O YES O NO

OFFENSE 5 — TIBRS CODE 5

Offense 5 Status	Offender Used (mark all that apply)	Location Type	Burglary Only:	# Of Premises Entered	Type Criminal Activity	Type Weapon / Force (mark if automatic weapon)	Bias Motivation
O Attempted O Completed	O Alcohol O Drugs O Computer Equip. O Not Applicable		O F Forcible Entry O N No Force			O Auto O Auto O Auto	

Gang Activity	Gang Type	Gang Name	Gang Activity	Gang Type	Gang Name	Home Invasion
		O Suspected O Known Name			O Suspected O Known Name	O YES O NO

OFFENSE 6 — TIBRS CODE 6

Offense 6 Status	Offender Used (mark all that apply)	Location Type	Burglary Only:	# Of Premises Entered	Type Criminal Activity	Type Weapon / Force (mark if automatic weapon)	Bias Motivation
O Attempted O Completed	O Alcohol O Drugs O Computer Equip. O Not Applicable		O F Forcible Entry O N No Force			O Auto O Auto O Auto	

Gang Activity	Gang Type	Gang Name	Gang Activity	Gang Type	Gang Name	Home Invasion
		O Suspected O Known Name			O Suspected O Known Name	O YES O NO

OFFENSE 7 — TIBRS CODE 7

Offense 7 Status	Offender Used (mark all that apply)	Location Type	Burglary Only:	# Of Premises Entered	Type Criminal Activity	Type Weapon / Force (mark if automatic weapon)	Bias Motivation
O Attempted O Completed	O Alcohol O Drugs O Computer Equip. O Not Applicable		O F Forcible Entry O N No Force			O Auto O Auto O Auto	

Gang Activity	Gang Type	Gang Name	Gang Activity	Gang Type	Gang Name	Home Invasion
		O Suspected O Known Name			O Suspected O Known Name	O YES O NO

OFFENSE 8 — TIBRS CODE 8

Offense 8 Status	Offender Used (mark all that apply)	Location Type	Burglary Only:	# Of Premises Entered	Type Criminal Activity	Type Weapon / Force (mark if automatic weapon)	Bias Motivation
O Attempted O Completed	O Alcohol O Drugs O Computer Equip. O Not Applicable		O F Forcible Entry O N No Force			O Auto O Auto O Auto	

Gang Activity	Gang Type	Gang Name	Gang Activity	Gang Type	Gang Name	Home Invasion
		O Suspected O Known Name			O Suspected O Known Name	O YES O NO

OFFENSE 9 — TIBRS CODE 9

Offense 9 Status	Offender Used (mark all that apply)	Location Type	Burglary Only:	# Of Premises Entered	Type Criminal Activity	Type Weapon / Force (mark if automatic weapon)	Bias Motivation
O Attempted O Completed	O Alcohol O Drugs O Computer Equip. O Not Applicable		O F Forcible Entry O N No Force			O Auto O Auto O Auto	

Gang Activity	Gang Type	Gang Name	Gang Activity	Gang Type	Gang Name	Home Invasion
		O Suspected O Known Name			O Suspected O Known Name	O YES O NO

OFFENSE 10 — TIBRS CODE 10

Offense 10 Status	Offender Used (mark all that apply)	Location Type	Burglary Only:	# Of Premises Entered	Type Criminal Activity	Type Weapon / Force (mark if automatic weapon)	Bias Motivation
O Attempted O Completed	O Alcohol O Drugs O Computer Equip. O Not Applicable		O F Forcible Entry O N No Force			O Auto O Auto O Auto	

Gang Activity	Gang Type	Gang Name	Gang Activity	Gang Type	Gang Name	Home Invasion
		O Suspected O Known Name			O Suspected O Known Name	O YES O NO

(FOR OFFICE USE ONLY)

CD 5-99

Incident Report (Continued)

CHATTANOOGA POLICE DEPARTMENT
INCIDENT REPORT AND CITATION

PAGE 5 OF 5

| | | |

Incident & Investigation: Opportunities for Improvement

The "Opportunities for Improvement" section provides a general list of observations compiled during the ICJ project interview phase. These ideas will be considerations for the development of the "To-Be" Model regarding the **Incident & Investigation** process.

BARCODE ON DRIVER'S LICENSE AND VEHICLE REGISTRATION -- A barcode or magnetic strip on the Defendant's Driver's License would promote electronic transfer of data into a law enforcement computer system. Having these barcodes, along with scanning devices, would reduce the amount of effort and time to gather offender information as well as minimize data entry errors. The current State of Tennessee Driver License formats contain two barcodes on the back of each card produced. One barcode contains the ISO Issuer Identification Number for Tennessee, as well as, the nine-digit Driver License number. The other barcode contains the same information as on the front of the Driver License and a great deal more pertaining to the driver. A barcode on the vehicle registration would allow Officers to "scan" information into their Laptops as opposed to typing.

LICENSE PLATES -- Tennessee is in the process of converting our license plate process to a digitized system. Digitized plates have several security features that include a process called Ensure, rim dye, and a bar code that contains the license plate number which can be read by anybody with a CCD scanner. Ensure is a process in which a unique identifier is embedded into the plate that can be seen from the angle that someone would be looking at the plate on the back of the vehicle. The embedded picture also has the date the plate was manufactured included. 3-M is planning to add a second safety feature of this type in the near future.

CRIMINAL HISTORY -- Law Enforcement has a need for more comprehensive Criminal History. This includes name, date of birth, social security, state identification number, charges, convictions, time served, Probation/Parole status, arrests, dispositions and outstanding warrants from all counties. The Automated Final Disposition project will support this opportunity.

DIGITAL PHOTOGRAPHS – The ability to quickly retrieve digital photographs currently collected by the Department of Safety, TBI, and Tennessee Offender Management Information System (TOMIS) would promote Law Enforcement identification efforts. A secure website to search and obtain photos would be helpful to Law Enforcement. The Department of Safety plans on developing a browser-based system that will make their digital photographs available to law enforcement agencies.

INTER-CITY INFORMATION SHARING -- Large metropolitan areas have difficulty obtaining information from nearby municipalities. For example, in Memphis, it is cumbersome to obtain information from Bartlett, Germantown, Kerrville, and Millington. Also, it is difficult to share information outside the state with adjoining states.

MOBILE COMPUTER DEVICES -- Handheld computers and wireless laptops in law enforcement vehicles would minimize re-keying. Improved integration can help but funding is needed to move ahead.

ONLINE PAWN SHOP SYSTEM -- Law enforcement would benefit from a system to search pawnshops from surrounding counties and cities for stolen items.

STANDARDS – Adopting National Justice e**X**tensible **M**arkup **L**anguage (XML) standards for forms and data such as Citations, Affidavit of Complaint, Offense Codes & Descriptions, Case Identification and State Identification (SID) Number would benefit the State of Tennessee Criminal Justice System. Justice XML is a tool to facilitate interoperability and information sharing among agencies and systems. It involves data, text, documents, transmission protocols and standards. More specifically, XML is a structured language for describing information — such as an Arrest/Incident Report — being sent electronically by one agency to another. XML sets a standard for electronic information exchange and describes the data contained in documents and electronic transactions.

WARRANT PROCESSING

Warrant Processing: Process Diagram

"As-Is" Model: Arrest Warrant

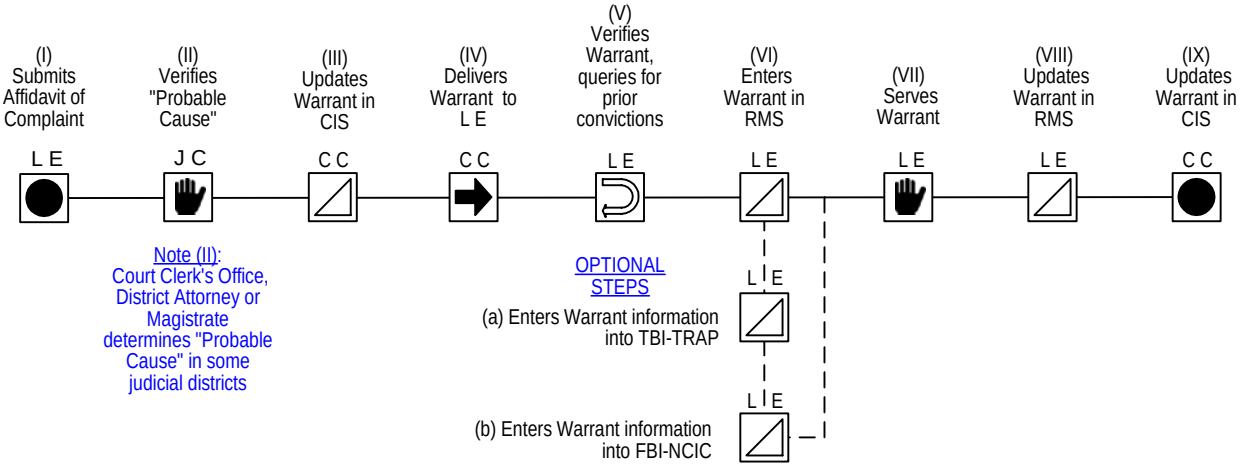

Warrant Processing: Process Overview

An Arrest Warrant is a document that formally charges a person with having committed a crime. This warrant authorizes law enforcement to arrest the individual against whom it has been issued.

Note: The process for Criminal Summons is similar to that of an Arrest Warrant. The primary difference is that when a Criminal Summons is served the person named in the summons is ordered to appear before the court on a specified date but is not taken into custody by the serving Law Enforcement Officer. A Criminal Summons is traditionally issued in a case where a lesser offense has been committed, insufficient evidence for an Arrest Warrant is available or the person requesting is not a Law Enforcement Officer.

Key information exchange events that occur during **Warrant** process are described below.

I. Law Enforcement Submits Affidavit of Complaint

The Arrest Warrant process is initiated by the submission of an Affidavit of Complaint from a Law Enforcement Officer or an individual to a Court Clerk Official. The Court Clerk Official reviews the Affidavit of Complaint and takes a sworn statement of facts from the Law Enforcement Officer. Upon entering the required information into the Court Clerk's Court Information System, the Court Clerk Official presents the Affidavit of Complaint to a Judicial Commissioner.

II. Judicial Commissioner Verifies Affidavit of Complaint for Probable Cause

Prior to the issuance of an Arrest Warrant, the Affidavit of Complaint is reviewed by a Judicial Commissioner to determine if the offense merits the issuance of an Arrest Warrant. If the Judicial Commissioner determines that the Affidavit of Complaint information supports an arrest, he documents their Probable Cause findings on the Affidavit of Complaint and signs it. The Judicial Commissioner returns the Affidavit of Complaint to the Court Clerk Official.

Note: Court Clerk’s Office, District Attorney or Magistrate makes determination of probable cause in some jurisdictions.

III. Court Clerk's Office Updates Warrant in Court Information System

The Court Clerk Official updates the record for the Affidavit of Complaint with the Probable Cause findings in the Court Clerk's Court Information System. The Court Clerk Official then issues and prints the Arrest Warrant.

IV. Court Clerk’s Office Delivers Warrant to Law Enforcement

The Court Clerk's Office provides copies of the Arrest Warrant to: (1) the Law Enforcement Agency that requested the Warrant and/or (2) the Law Enforcement Agency that manages the Booking Process for the county in which the Arrest Warrant was issued. The Court Clerk's Office gives a copy of the Arrest Warrant to the requesting Law Enforcement Officer upon its completion.

V. Law Enforcement Verifies Warrant and Queries for Prior Convictions

Upon receipt of an Arrest Warrant, the Law Enforcement Agency that requested the Warrant will verify that the information on the Warrant is correct. The Law Enforcement Agency will perform queries on TBI’s Tennessee Repository for Apprehension of Persons (TRAP) and FBI’s National Crime Information Center (NCIC) for any prior convictions.

VI. Law Enforcement Enters Warrant into Records Management System

The Law Enforcement Agency enters a record of the Arrest Warrant into the agency's Records Management System. The Law Enforcement Agency ensures that the Warrant is entered into the appropriate Wanted Person File within either NCIC or TRAP, but never simultaneously into both systems.

When an Arrest Warrant meets the criteria for entry into the National (FBI) Wanted Person File, the Law Enforcement Agency enters the Arrest Warrant information into NCIC. When an Arrest Warrant meets the criteria for the Tennessee Wanted Person File, the Arrest Warrant information is entered into TRAP. Law Enforcement Agencies store Arrest Warrants in file cabinets and/or manage electronic copies with document imaging software.

VII. Law Enforcement Serves Arrest Warrant

When the person named in an Arrest Warrant is apprehended, the warrant has been "served". The Law Enforcement Officer that "served" the Warrant updates the document with the particulars ("Who", "When") of its service. In most jurisdictions, the Booking Agency will be provided with a copy of the Arrest Warrant to be placed in the Defendant's Booking File.

The Law Enforcement Officer returns the updated Arrest Warrant to the administrative division of his agency. Law Enforcement Agencies return "served" Arrest Warrants to the Court Clerks Office.

VIII. Law Enforcement Updates Warrant in Records Management System

After an Arrest Warrant is "served", the Law Enforcement Agency updates the agency Records Management System with the particulars of the Warrant's service. If the Law Enforcement Agency entered a record of the Arrest Warrant in a Wanted Person File, it updates the record with the particulars of the Warrant's service.

IX. Court Clerk's Office Updates Warrant in Court Information System

The Court Clerk's Office reviews the Arrest Warrants returned by Law Enforcement and updates the Court Clerk's Court Information System with the particulars of the warrant's service. Court Clerk Offices store Arrest Warrants in file cabinets and may also manage electronic copies with document imaging software.

Warrant Processing: Agency Roles & Responsibilities

Criminal justice agencies involved in the **Warrant** process and their information exchange responsibilities are listed below.

Court Clerk's Office

- Collects and processes Affidavit of Complaint forms received from Law Enforcement Agencies.
- Keeps records of Affidavit of Complaint submissions.
- Keeps records of issued, served, and outstanding Arrest Warrants.
- Facilitates the distribution of Arrest Warrants to the appropriate Law Enforcement Agencies for service.
- Updates Warrant service status in Court Information System and/or court files.

Law Enforcement Agency

- Prepares and files Affidavits of Complaint with the Court Clerk’s Office.
- Keeps records of Affidavits of Complaint prepared.
- Receives Arrest Warrants from the Court Clerk's Office.
- Keeps records of Arrest Warrants requested by the Law Enforcement Agency.
- Serves/Executes Arrest Warrants.
- Updates Arrest Warrants with the details ("Who", "When") of their service/execution.
- Keeps records of Arrest Warrants served by the Law Enforcement Agency.
- Returns served/executed Arrest Warrants to the Court Clerk's Office.
- Maintains Arrest Warrant records that the Law Enforcement Agency is responsible for within the National Wanted Person File (NCIC).
- Maintains Arrest Warrant records that the Law Enforcement Agency is responsible for within the Tennessee Wanted Person File (TRAP).

Judicial Commissioner

- Reviews submitted Affidavits of Complaint for probable cause.
- Records probable cause findings on Affidavits of Complaint.
- Keeps records of Affidavits of Complaint reviewed.

Warrant Processing: Information Exchange

The Events that generate inter-agency Information Exchange within the **Warrant** process are shown in the table below.

Information Exchange during the Warrant Process

ID	EVENT	INFORMATION EXCHANGED	SEND AGENCY	RECEIVE AGENCY	METHOD	FREQ
	A LEA submits an Affidavit of Complaint to the Court Clerk's Office.	Basic ID Data Case ID Data Charge Data Contact Data Enhanced ID Data Just. Official ID Data Name Data Personal ID Data Social ID Data	LEA	Court Clerk	Paper: Affidavit of Complaint	HIGH
	The Court Clerk's Office gives the Affidavit of Complaint to a Judicial Commissioner.	Basic ID Data Case ID Data Charge Data Contact Data Enhanced ID Data Just. Official ID Data Name Data Personal ID Data Social ID Data	Court Clerk (CC) In some judicial districts the CC, District Attorney or Magistrate determines "Probable Cause"	Judicial Comm.	Paper: Affidavit of Complaint	HIGH
	A Judicial Commissioner returns a reviewed Affidavit of Complaint to the Court Clerk's Office.	Basic ID Data Case ID Data Charge Data Contact Data Enhanced ID Data Just. Official ID Data Name Data Personal ID Data Social ID Data	Judicial Comm.	Court Clerk	Paper: Affidavit of Complaint	HIGH
	The Court Clerk's Office gives the "requesting" LEA a copy of the Arrest Warrant.	Basic ID Data Case ID Data Charge Data Contact Data Enhanced ID Data Just. Official ID Data Name Data Personal ID Data Warrant Data	Court Clerk	LEA	Paper: Arrest Warrant	HIGH

ID	EVENT	INFORMATION EXCHANGED	SEND AGENCY	RECEIVE AGENCY	METHOD	FREQ
	The Court Clerk's Office gives a copy of the Arrest Warrant to the LEA slated to serve/execute warrants.	Basic ID Data Case ID Data Charge Data Contact Data Enhanced ID Data Just. Official ID Data Name Data Personal ID Data Warrant Data	Court Clerk	LEA	Paper: Arrest Warrant	HIGH
	A LEA enters a new or maintains an existing record in the National Wanted Person File.	Arrest Data Basic ID Data Case ID Data Charge Data Contact Data Enhanced ID Data Just. Official ID Data Name Data Personal ID Data Warrant Data	LEA	FBI	Electronic: NCIC	MED
	A LEA enters a new or maintains an existing record in the Tennessee Wanted Person File.	Arrest Data Basic ID Data Case ID Data Charge Data Contact Data Enhanced ID Data Just. Official ID Data Name Data Personal ID Data Warrant Data	LEA	TBI	Electronic: TRAP	MED
	A LEA returns a served/executed Arrest Warrant to the Court Clerk's Office.	Arrest Data Basic ID Data Case ID Data Charge Data Contact Data Enhanced ID Data Just. Official ID Data Name Data Personal ID Data Warrant Data	LEA	Court Clerk	Paper: Arrest Warrant	HIGH

Warrant Processing: Data Elements

The data elements listed below are exchanged between multiple criminal justice agencies and are essential to the **Warrant** Process. See APPENDIX B: DATA ELEMENTS for more details.

ARRS	**ARREST DATA**
BASC	**BASIC IDENTIFICATION DATA**
CASE	**CASE IDENTIFICATION DATA**
CHRG	**CHARGE DATA**
CONT	**CONTACT DATA**
IDEN	**ENHANCED IDENTIFICATION DATA**
JUST	**JUSTICE OFFICIAL IDENTIFICATION DATA**
NAME	**NAME DATA**
PERS	**PERSONAL IDENTIFICATION DATA**
WARR	**WARRANT DATA**

Warrant Processing: Technology

The table below details the primary computer systems and databases used in exchange of information during the Arrest Warrant Processing process. See Appendix C for more detailed information about computer systems and applications.

Warrant Processing – Technology

NAME	DESCRIPTION
Court Information System (CIS)	A court information system is used to manage the daily affairs of the court clerk's office. It contains functionality for Case History, Master Person File, Bill-of-Cost, Case Disposition Rule & Execution, and Reporting System and generates a docket number. Maintained by: Court Clerk's Office
National Crime Intelligence Center (NCIC)	A computerized network that connects Law Enforcement Agencies throughout the United States and contains information about crimes that have occurred throughout the country. Criminal History and/or Arrest Warrant status information is commonly requested from NCIC. Maintained by: Federal Bureau of Investigation (FBI)
Records Management System (RMS)	A computer system that captures and stores information about a case and promotes an agency's ability to manage its records. Maintained by: Law Enforcement Agency
Tennessee Repository for the Apprehension of Persons (TRAP)	A repository for outstanding Tennessee Arrest Warrants which do not meet the criteria for entry into the FBI's NCIC Wanted Person File. Maintained by: Tennessee Bureau of Investigation (TBI)

Warrant Processing: Forms

The primary forms used during Warrant Processing are summarized in the table below. An example of each form follows; however, there are variations of these forms used in different areas in Tennessee.

ID	FORM NAME	FORM DESCRIPTION
F-5	Affidavit of Complaint	A document that sets forth a criminal violation and serves as an instrument for filing for an Arrest Warrant.
F-6	Arrest Warrant	A document issued to law enforcement that empowers the arrest/apprehension of the person named in the warrant.
F-7	Summons	A document that summons a Defendant to appear before a court to answer a minor criminal charge; issued in lieu of an Arrest Warrant.

Affidavit of Complaint

GENERAL SESSIONS COURT OF _____ COUNTY TENNESSEE

State of Tennessee vs. _____

State Control # _____ _____ County Case # _____

Attorney for Defendant _____ Address _____
Court Date _____ _____
State, Deft. to _____ at _____am/pm Phone _____ DL# _____
State, Deft. to _____ at _____am/pm DOB _____ SSN#_____
State, Deft. to _____ at _____am/pm Sex____ Race____ Ht____ Wt____ Hair____ Eyes _____
State, Deft. to _____ at _____am/pm Work _____
State, Deft. to _____ at _____am/pm _____

AFFIDAVIT OF COMPLAINT

I, the affiant named below, after being sworn, state under oath that on or about _____ in _____ County, Tennessee, _____ committed the offense(s) of violation(s) of T.C.A. § _____. I further state under oath that the essential facts constituting the offense(s), the sources of my information and the reasons why this information is believable and reliable are as follows:

Affiant's Signature: _____

Name (Printed): _____

Address (Printed): _____

_____

Phone Number: _____

Sworn to and subscribed before me on

_____, 20____

_____
Judge/Clerk/Judicial Commissioner

PROBABLE CAUSE DETERMINATION

Based on the affidavit of complaint, I find there is probable cause to believe that on the date set forth above in_____ County, Tennessee the defendant committed the offense(s) of violation(s) of TCA § _____

_____

( ) Defendant given citation or arrested without warrant ( ) Arrest warrant shall issue ( ) Criminal summons shall issue

Date _____ Judge/Clerk/Judicial Commissioner _____

GENERAL SESSIONS COURT OF _____ COUNTY, TENNESSEE

STATE OF TENNESSEE

vs.

_____
Defendant

State Control #_____

Case # _____

INFORMATION ABOUT THE DEFENDANT

Name: _____
Address: _____
DOB: _____ Sex: _____
Race: _____ Ht.: _____
Wt.: _____ Hair: _____ Eyes: _____
Phone: _____ DL#: _____
Place of Employment: _____
May be Found at: _____
Other: _____

WITNESSES

Summon as witnesses on the part of the State:

Summon as witnesses on the part of the Defendant:

ARREST WARRANT

TO THE DEFENDANT

( ) Based on the affidavit of complaint filed in this case, there is probable cause to believe that you have committed the offense(s) of violation(s) of T.C.A. §_____

( ) Defendant has failed to appear in court or to report to jail when required to do so.

( ) _____

TO ANY LAWFUL OFFICER:
You are therefore commanded in the name of the State of Tennessee to immediately **ARREST** the defendant named above and bring the defendant to this court to answer the charges.

Bail is set at $_____

Conditions of Bond_____

Date:_____

_____
Judge/Clerk/Judicial Commissioner

OFFICER'S RETURN

( ) Warrant served by arresting defendant today or on _____

( ) _____

Officer's Signature:

Officer's Name (Printed):

Officer's Agency (Printed):

Date:_____

GENERAL SESSIONS COURT OF
_____ COUNTY,
TENNESSEE

STATE OF TENNESSEE

vs.

_____
Defendant

State Control #_____

Case # _____

INFORMATION ABOUT THE DEFENDANT

Name:_____
Address:_____
DOB:_____ Sex:_____
Race:_____ Ht.:_____
Wt.:_____ Hair:_____ Eyes:_____
Phone:_____ DL#:_____
Place of Employment:_____
_____
May be Found at:_____
_____
Other:_____
_____
_____
_____

WITNESSES

Summon as witnesses on the part of the State:

_____
_____
_____

Summon as witnesses on the part of the Defendant:

_____
_____
_____

CRIMINAL SUMMONS

TO THE DEFENDANT

( ) Based on the affidavit of complaint filed in this case, there is probable cause to believe that you have committed the offense(s) of violation(s) of T.C.A. § _____
_____

( ) _____
_____

_____
Judge/Clerk/Judicial Commissioner Date

YOU ARE HEREBY SUMMONED TO APPEAR
( ) In the booking room at _____
_____
(address of booking office)
Within ten (10) calendar days from date of service of this summons.

( ) To appear before the General Sessions Court of _____County, Tennessee in
_____

to answer charges on _____
at _____a.m./p.m.

NOTICE: YOU ARE CHARGED WITH A STATE CRIMINAL OFFENSE. THIS SUMMONS HAS BEEN ISSUED IN LIEU OF AN ARREST WARRANT. YOUR FAILURE TO APPEAR IN COURT ON THE DAY AND TIME ASSIGNED BY THIS SUMMONS OR THE FAILURE TO APPEAR FOR BOOKING AND PROCESSING WILL RESULT IN YOUR ARREST FOR SEPARATE CRIMINAL OFFENSE PUNISHABLE AS PROVIDED IN T.C.A. §39-16-609 REGARDLESS OF THE DISPOSITION OF THE CHARGE FOR WHICH YOU WERE ORIGINALLY SUMMONED. YOU ARE ENCOURAGED TO CONSULT WITH AN ATTORNEY ABOUT THIS SUMMONS. THE SIGNING AND ACCEPTANCE OF THIS SUMMONS IS NOT AN ADMISSION OF GUILT OF THE CRIMINAL OFFENSE.

_____
Defendant Date

OFFICER'S RETURN

( ) Summons served by delivering a copy to defendant today or on _____
_____
_____

( ) _____
_____
_____

_____

Officer's Signature:

_____

Officer's Name (Printed):

_____

Officer's Agency (Printed)

_____

Date:_____

Warrant Processing: Opportunities for Improvement

The "Opportunities for Improvement" section provides a general list of observations compiled during the ICJ project interview phase. These ideas will be considerations for the development of the "To-Be" Model regarding the **Warrant** process.

LAW ENFORCEMENT ACCESS TO COURT INFORMATION -- Law Enforcement would like immediate computer access to review the Affidavit of Complaint and to see if the Arrest Warrant has been served.

STATE CONTROL NUMBER -- If the Sheriff Deputies and Police Officers would write the State Control Number on the Warrant, the Court Clerk's Office could enter it into the Court information System. This would set the groundwork for the Final Dispositions to be sent electronically to the Tennessee Bureau of Investigation (TBI). This would enhance the criminal history database, as well as, eliminate the need for manually processing the R-84 Final Disposition Green Sheets.

WARRANT REPOSITORY -- Enhance the processes associated with entering, accessing, archiving and purging the Tennessee Repository for Apprehension of Persons (TRAP) database.

AUTOMATED WORKFLOW FOR WARRANTS -- Utilize a computer process to create Warrants. The online data fields could contain drop-down lists that enforce business rules. The system would send information from one agency to another based upon "online approvals."

ARREST & BOOKING

Arrest & Booking: Process Diagram

"As-Is" Model: Arrest & Booking (Page 1 of 3)

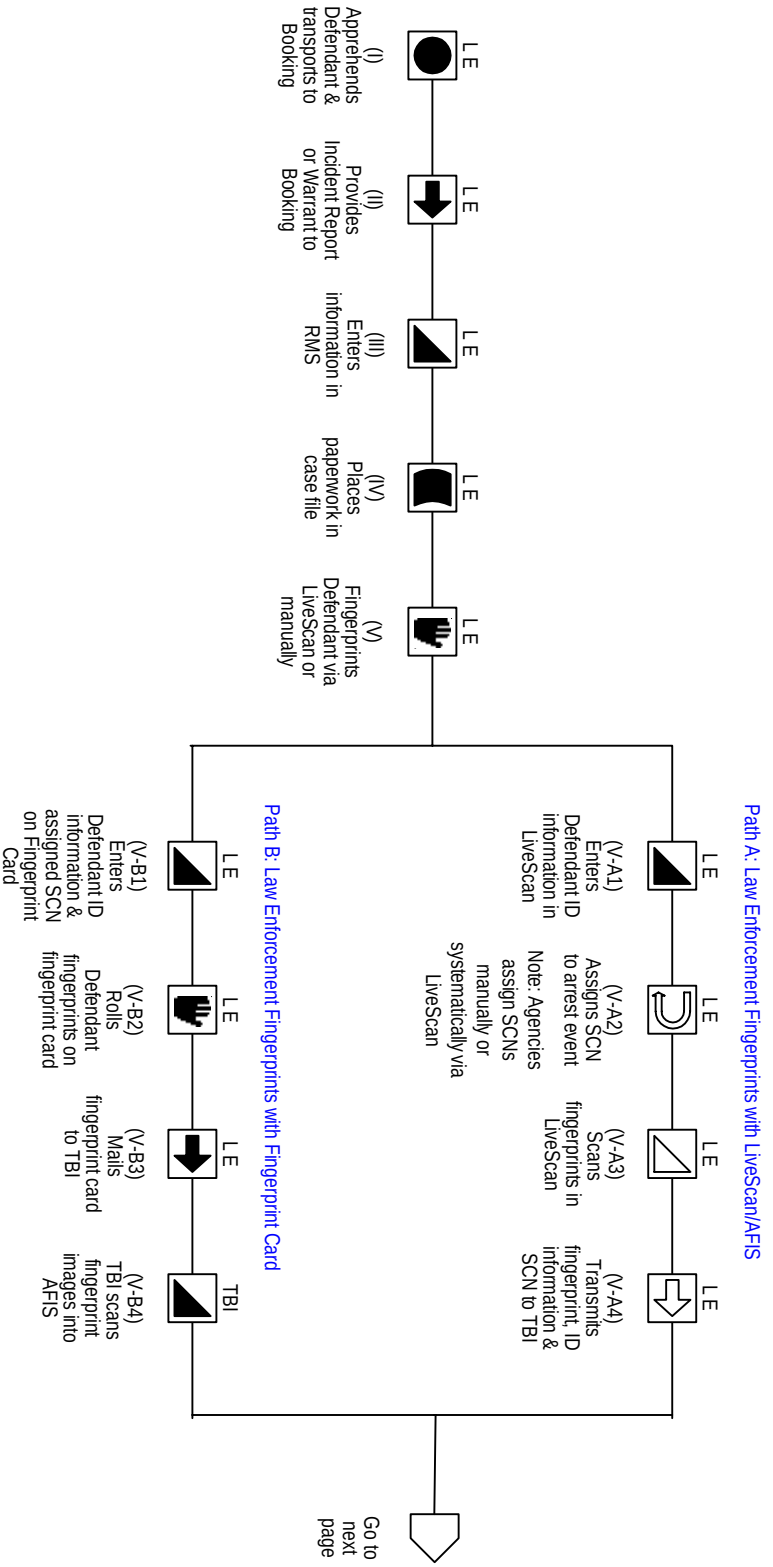

"As-Is" Model: Arrest & Booking (Page 2 of 3)

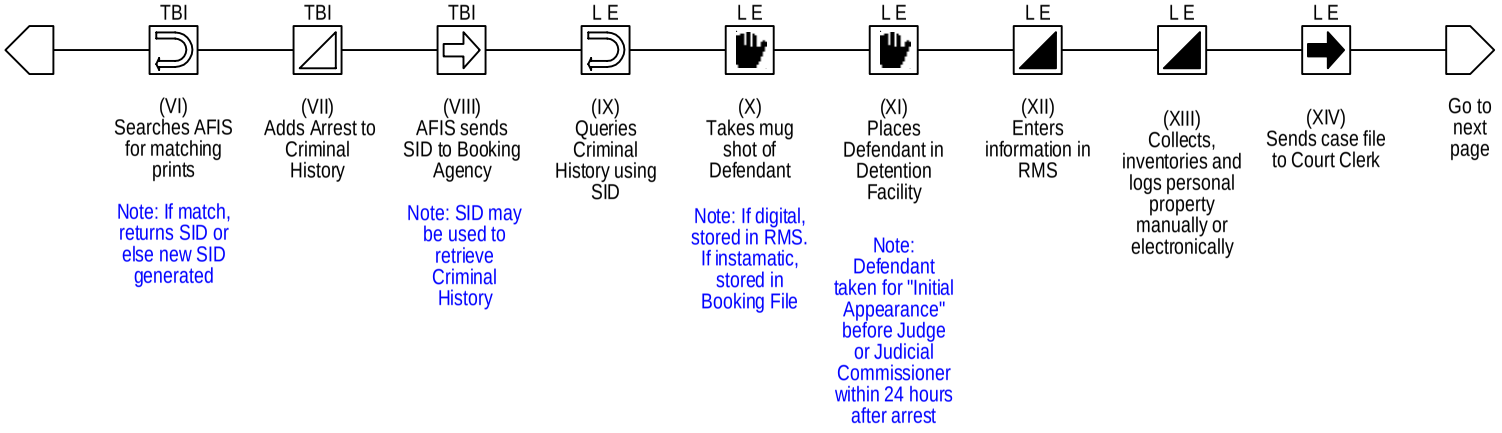

"As-Is" Model: Arrest & Booking (Page 3 of 3)

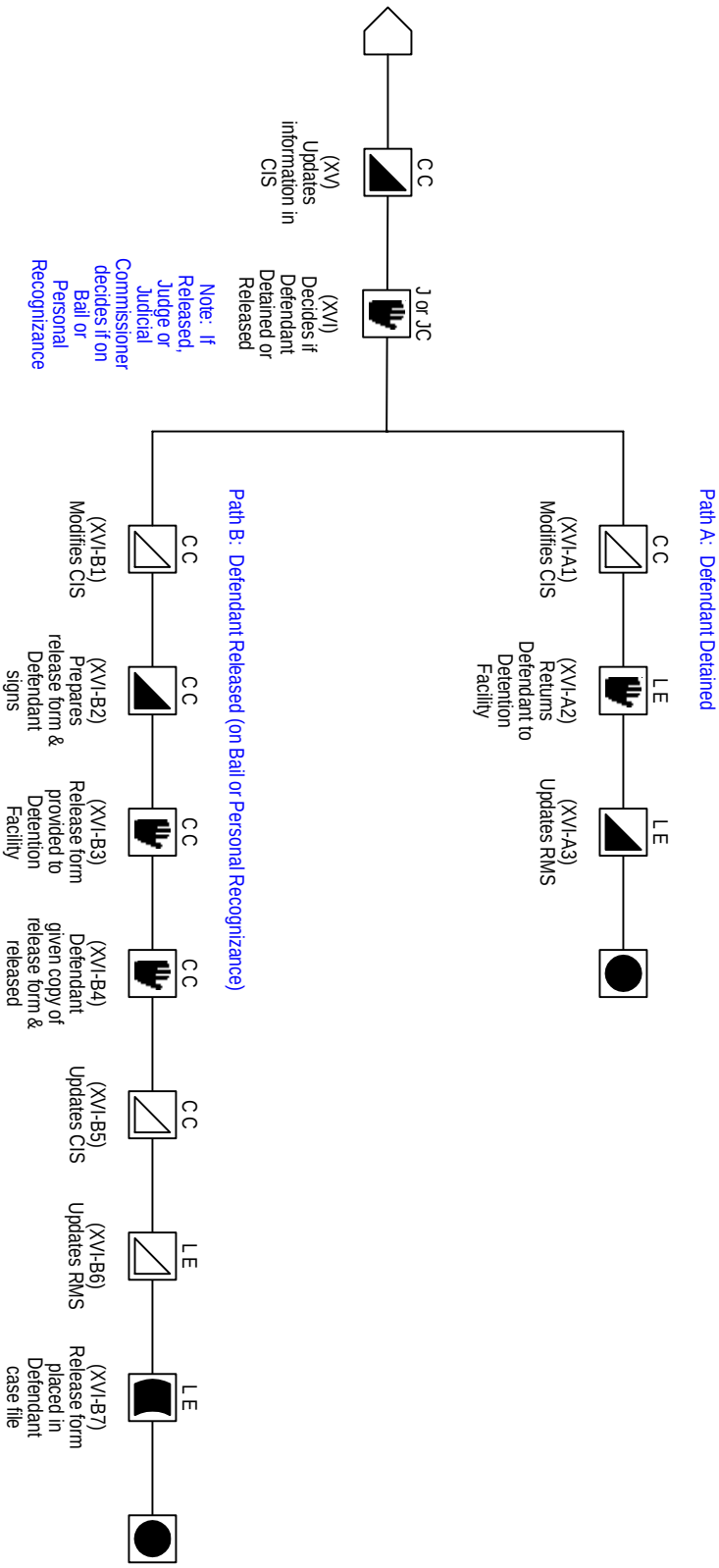

Arrest & Booking: Process Overview

A Defendant may be arrested on the basis of an outstanding Arrest Warrant or immediately following the commission of a crime. Upon arrest by Law Enforcement Officer, the Defendant is typically taken to the County Jail to be booked. During the Booking process, demographic information is collected and a photograph (i.e., mug shot) is taken by the Booking agency. The Defendant is fingerprinted and the fingerprints are submitted to the Tennessee Bureau of Investigation (TBI). Upon receipt of the information, the TBI performs a Criminal History Check and return the results of the check to the Booking agency. Based on the nature of the Defendant's crime and criminal history, the Defendant may be released, placed in jail, or permitted to post bail.

Key information exchanges that take place during the **Arrest & Booking** process are described below:

I. Law Enforcement Apprehends Defendant and Transports to Booking

A Law Enforcement Officer takes the Defendant into custody and transports him to a Booking Agency such as the County Jail.

II. Law Enforcement Provides Incident Report or Warrant to Booking

The arresting Officer provides a completed Incident Report and/or Arrest Warrant to the Officer who is responsible for the Booking process.

III. Law Enforcement Enters Information in Records Management System

The Booking Officer enters information about the Defendant into the Booking Agency's Records Management System. The information is gathered from: (1) the documents provided by the arresting Officer, (2) the arresting Officer's testimony, (3) Observations made by the Booking Officer, and/or (4) the Defendant's testimony.

IV. Law Enforcement Places Paperwork in Case File

The information received by the Booking Officer is placed in the Defendant's paper case file (i.e., Booking File). The Booking File contains a variety of information about the arrest and is maintained by the Booking Agency while the Defendant is in their custody.

V. Law Enforcement Fingerprints Defendant

Most Booking Agencies capture and transmit fingerprint information electronically to the TBI using LiveScan devices. Booking Agencies that do not use LiveScan devices capture and transmit fingerprint information with ink and paper fingerprint cards.

A. LAW ENFORCEMENT FINGERPRINTS WITH LIVESCAN/AFIS

1. The Booking Officer enters the Defendant's basic identification information into a LiveScan device.
2. A State Control Number is assigned to the current arrest event (i.e., fingerprint submission event). Booking Agencies with LiveScan devices may configure the device to systematically assign a State Control Number to each subsequent fingerprint submission or they may assign State Control Numbers manually.
3. The Booking Officer scans the Defendant's fingerprints into the LiveScan device. The Booking Officer verifies that the fingerprint images meet the standards for classification.

4. The LiveScan device sends the Defendant's fingerprint images, basic identification information, and the assigned State Control Number electronically to the TBI.

B. LAW ENFORCEMENT FINGERPRINTS WITH FINGERPRINT CARD

1. The Booking Officer assigns a State Control Number to the current arrest event. The Booking Officer writes the Defendant's basic identification information and State Control Number onto a Fingerprint Card.
2. The Booking Officer "rolls" the Defendant's fingerprints in ink and captures their images on a paper fingerprint card. The Booking Officer verifies that the fingerprint images meet the standards for classification.
3. The Booking Agency mails the fingerprint card to the TBI.
4. Since the fingerprint images were received on a fingerprint card, the TBI must scan a digital image of the fingerprint images into its computer system.

VI. TBI Searches AFIS for Matching Fingerprints

The TBI checks the Defendant's fingerprints against the Automated Fingerprint Identification System (AFIS) database. If a match for the submitted fingerprints is found in AFIS, the Defendant's criminal history record is retrieved from the Tennessee Criminal History Repository (TCHR). The Defendant's name and State Identification Number (SID) are gathered from the record. If there is no match found for the submitted fingerprints in AFIS, the system will generate a new SID number for the Defendant.

VII. TBI Adds Arrest to Criminal History

The TBI adds the new arrest information to the Tennessee Criminal History Repository. Submitted fingerprint images are added to AFIS when: (1) a new Criminal History record is created or (2) the submitted fingerprint images are deemed superior to the currently stored fingerprint images. The superior images are stored in AFIS and the previous images are discarded by the system.

VIII. TBI (AFIS) Sends SID to Booking Agency

The TBI sends either the previously assigned SID number and Defendant’s name or a newly generated SID number to the Booking Agency. When fingerprints are submitted to the TBI with a LiveScan device, the SID Number is returned to the Booking Agency shortly after submission. When fingerprints are submitted on a fingerprint card, the SID Number may be returned to the Booking Agency via mail, telephone or fax.

IX. Law Enforcement Queries Criminal History using SID

When the Defendant's identity is determined to be different than originally disclosed or the Booking Officer needs additional information, a query of the Tennessee Criminal History Repository may be conducted using the SID number returned by the TBI. The Criminal History check will provide information about the Defendant's prior arrests, case dispositions, and/or outstanding warrants. The Booking Agency uses this information to determine if a Defendant is eligible to be released on bail, or if they should contact other Law Enforcement Agencies that are seeking the Defendant.

X. Law Enforcement Takes Mug Shot of Defendant

The Booking Officer will take a mug shot of the Defendant. Some Booking Agencies have the technology to capture a digital photograph image and store it along with demographic information in a Records Management System or database. Many Booking Agencies use an instamatic camera and store the physical photographs in the Defendant's Booking File.

XI. Law Enforcement Places Defendant in Detention Facility

The Booking Agency places the Defendant in a Detention Facility at the County Jail until the "Initial Appearance" before the Judge or Judicial Commissioner. This “Initial Appearance” must take place within 24 hours after the arrest.

XII. Law Enforcement Enters Information in Records Management System

The Booking Agency enters information about the Defendant into the Detention Facility's Records Management System.

XIII. Law Enforcement Collects, Inventories and Logs Personal Property

A Law Enforcement Officer collects the Defendant's personal property, inventories the items and enters a description of the property into a manual or electronic log.

XIV. Law Enforcement Sends Case File to Court Clerk

The Booking Agency notifies the Court Clerk's Office of the arrest by sending the Defendant's paper case file to the Court Clerk's Office.

Note: In some of Tennessee's larger jurisdictions, the Booking Agency and the Court Clerk's Office share a common Records Management System. In these instances, the entry of an arrest record into the Booking Agency's sub-system results in the simultaneous creation of an arrest record in the Court Clerk's Office sub-system.

XV. Court Clerk Updates Information in Court Information System

The Court Clerk's Office updates the Court Information System with a record of the arrest including the State Control Number and Offender’s State ID.

XVI. Judge or Judicial Commissioner Decides if Defendant Detained or Released

The Defendant is taken before a Judge or Judicial Commissioner for an "Initial Appearance". The Judge or Judicial Commissioner reviews the arrest information and decides whether the Defendant should be: (A) Detained by the Booking Agency or (B) Released on Bail/Personal Recognizance. During the "Initial Appearance", the Defendant is advised of the Law Enforcement Agency's charges against him and is afforded the right to counsel. In many instances, the "Initial Appearance" is combined with a Bail/Release On Recognizance hearing.

A. DEFENDANT DETAINED

1. The Court Clerk's Office modifies its Court Information System to reflect that the Defendant will be detained.
2. The Law Enforcement Agency that has custody of the Defendant will return him to the Detention Facility.

3. The Detention Facility's Records Management System is updated to reflect the denial of the Defendant's release.

B. DEFENDANT RELEASED (ON BAIL OR PERSONAL RECOGNIZANCE)

1. The Court Clerk's Office modifies the record of the case within its Court Information System to reflect that the Defendant is eligible to be released on bail and the bail provisions or recognizance.
2. The Court Clerk's Office prepares a release form for the Defendant. If the Defendant is able to post bail, the Court Clerk Official who is authorized to collect bail updates the release form with information about the release (date, time, payer, other) and returns the form to the Court Clerk's Office. The Defendant must sign the written agreement to appear when required and to comply with the conditions of the bail bond.
3. The release form is given to the Law Enforcement Agency that has custody of the Defendant.
4. The Defendant is given a copy of the release form and is released.
5. The Court Clerk's Office modifies the record of the case within its Court Information System to reflect the details of the release.
6. The Defendant's record within the Detention Facility's Records Management System is updated to reflect the Defendant's release on bail or recognizance.
7. A copy of the release form is placed in the Defendant's paper case file.

Arrest & Booking: Agency Roles & Responsibilities

Criminal justice agencies involved in the **Arrest & Booking** process and their information exchange responsibilities are listed below.

Court Clerk's Office

- Receives arrest information from Law Enforcement Agencies.
- Keeps records of arrest information received from Law Enforcement Agencies.
- Provides information to Judges/Judicial Commissioners that administer a Defendant's initial appearance.
- Keeps records of the outcome of a Defendant's initial appearances.
- Completes Confinement Authorizations or Release Authorizations following a Defendant's initial appearance.
- Provides Law Enforcement Agencies with Confinement Authorization and Release Authorization forms (when applicable).
- Collects and records payments (bond, fees, fines, other) received from Defendants.

Judge or Judicial Commissioner

- Receives and reviews information provided by the Court Clerk's Office for the administration of a Defendant's "initial appearance".
- Administers various information exchanges associated with a Defendant's "initial appearance" proceedings.

Law Enforcement Agency

- Provides Booking Agencies and Court Clerk's Offices with information about an arrest.
- Receives and processes information from arresting Law Enforcement Agencies in order to facilitate the booking of a Defendant.
- Keeps records of information collected from Defendants and arresting Law Enforcement Agencies during the Booking process.
- Collects and stores Defendant's fingerprint images and basic identification information.
- Submits Defendant's fingerprint images and basic identification information to the Tennessee Bureau of Investigation (TBI).
- Captures and stores a Defendant's mug shot/photograph.
- Receives a Defendant's State Identification Number from the TBI.
- Obtains a Defendant's criminal history/background by querying the TBI's Tennessee Criminal History Repository.
- Receives Confinement Authorization and Release Authorization forms from the Court Clerk's Office (when applicable).

Tennessee Bureau of Investigation

- Receives and processes Defendant's fingerprint images and basic identification information submitted by Booking Agencies.
- Checks a Defendant's fingerprint images against the Automated Fingerprint Identification System (AFIS) and determines a Defendant's State Identification Number.
- Returns a Defendant's State Identification Number to a requesting Booking Agency.
- Provides criminal history/background information to a Law Enforcement Agencies via the Tennessee Criminal History Repository.

Arrest & Booking: Information Exchange

The Events that generate inter-agency Information Exchange within the **Arrest & Booking** process are shown in the table below.

Information Exchange during the Arrest & Booking Process

ID	EVENT	INFORMATION EXCHANGED	SEND AGENCY	RECEIVE AGENCY	METHOD	FREQ
	An arresting LEA takes a Defendant in for booking.	Address Data Arrest Data Basic ID Data Case ID Data Charge Data Contact Data Enhanced ID Data Just. Official ID Data Name Data Offense Data Property Data Warrant Data	LEA (Arresting)	LEA (Booking)	Paper: Incident/Offense Report Paper: Arrest Warrant	HIGH
	A booking LEA submits the Defendant's fingerprints and basic information to the TBI.	Arrest Data Basic ID Data Case ID Data Charge Data Enhanced ID Data Fingerprint Data Just. Official ID Data Name Data Offense Data	LEA	TBI	Electronic: Live-scan device Or Paper: Fingerprint card	HIGH
	The results of a fingerprint submission are returned to a LEA.	Basic ID Data Name Data Personal ID Data	TBI	LEA	Electronic: Live-scan device	HIGH
	TBI returns the results of a criminal history check to a Booking LEA.	Arrest Data Basic ID Data Case ID Data Charge Data Custody Data Disposition Data Name Data Offense Data Personal ID Data Sentence Data	TBI	LEA	Electronic: Tennessee Criminal History Repository	MED

ID	EVENT	INFORMATION EXCHANGED	SEND AGENCY	RECEIVE AGENCY	METHOD	FREQ
	A booking LEA notifies the Court Clerk's Office of an arrest.	Arrest Data Basic ID Data Booking Data Case ID Data Charge Data Just. Official ID Data Name Data Offense Data Property Data Warrant Data	LEA	Court Clerk	Electronic: Booking's Records Management System Or Paper: Case file containing arrest/booking information and reports	HIGH
	The Court Clerk's Office provides information about an arrest to a Judge or Judicial Commissioner.	Arrest Data Basic ID Data Booking Data Case ID Data Charge Data Just. Official ID Data Name Data Offense Data Property Data Warrant Data	Court Clerk	Judge or Judicial Commissioner	Paper: Case file containing arrest/booking information and reports	HIGH
	The Defendant is detained after an initial appearance before a Judge or Judicial Commissioner.	Basic ID Data Case ID Data Custody Data Just. Official ID Data Name Data Schedule Data	Court Clerk	LEA	Paper: Confinement Authorization Form And/Or Electronic: LEA's Records Management System	MED
	The Defendant is released after an initial appearance before a Judge or Judicial Commissioner.	Basic ID Data Case ID Data Just. Official ID Data Name Data Release Data Schedule Data	Court Clerk	LEA	Paper: Release Authorization Form And/Or Electronic: LEA's Records Management System	MED

Arrest & Booking: Data Elements

The data elements listed below are exchanged between multiple criminal justice agencies and are essential to the **Arrest & Booking** process. See APPENDIX B: DATA ELEMENTS for more details.

ADDR	**Address Data**
ARRS	**Arrest Data**
BASC	**Basic Identification Data**
BOOK	**Booking Data**
CASE	**Case Identification Data**
CHRG	**Charge Data**
CONT	**Contact Data**
CUST	**Custody Data**
DISP	**Disposition Data**
IDEN	**Enhanced Identification Data**
FING	**Fingerprint Data**
JUST	**Justice Official Identification Data**
NAME	**Name Data**
OFFN	**Offense Data**
PERS	**Personal Identification Data**
PROP	**Property Data**
RLSE	**Release Data**
SCHD	**Schedule Data**
SENT	**Sentence Data**
WARR	**Warrant Data**

Arrest & Booking: Technology

The table below details the primary computer systems and databases used in exchange of information during the **Arrest & Booking** process. See Appendix D for more detailed information about computer systems and applications.

Arrest & Booking – Technology

NAME	DESCRIPTION
Automated Fingerprint Identification System (AFIS)	A computer system that is housed at the TBI. It contains all of the digital fingerprints of criminal offenders in Tennessee. LiveScan fingerprints are sent to AFIS via LiveScan. The prints are compared to prints that are in the AFIS database. If a match is found, the system returns the Sate ID Number and identifying information of the offender. Maintained by: Tennessee Bureau of Investigations
Court Information System (CIS)	A court information system is used to manage the daily affairs of the court clerk's office. It contains functionality for Case History, Master Person File, Bill-of-Cost, Case Disposition Rule & Execution, and Reporting System and generates a docket number. Maintained by: Court Clerk's Office
LiveScan	LiveScan is a computer system that digitally captures fingerprint images and information about the person being printed and then electronically transmits that data to a law enforcement repository for identification purposes. Maintained by: Federal Bureau of Investigations
Records Management System (RMS)	A computer system that captures and stores information about a case and promotes an agency's ability to manage its records. Maintained by: Law Enforcement Agency, Detention Facility
Tennessee Criminal History Repository (TCHR)	The Tennessee Criminal History Repository (TCHR) contains information about arrests, charges, and final dispositions of individuals who have committed offenses in Tennessee. Maintained by: Tennessee Bureau of Investigation (TBI)

Arrest & Booking: Forms

ID	FORM NAME	FORM DESCRIPTION
F-8	Fingerprint Card	The FD-285 Fingerprint Card is provided by the FBI.
F-9	AFIS Input	The LiveScan/Automated Fingerprint Identification System (AFIS) is an online version of the fingerprint card. It is available at many of the Booking agencies in Tennessee.

FD-285 Fingerprint Card

FD-258 FINGERPRINT CARD

APPLICANT

LEAVE BLANK

TYPE OR PRINT ALL INFORMATION IN BLACK

LAST NAME NAM FIRST NAME MIDDLE NAME

FBI LEAVE BLANK

SIGNATURE OF PERSON FINGERPRINTED

RESIDENCE OF PERSON FINGERPRINTED

DATE SIGNATURE OF OFFICIAL TAKING FINGERPRINTS

EMPLOYER AND ADDRESS

REASON FINGERPRINTED

ALIASES AKA

ORI TN920180Z ADMIN OFC OF COURTS NASHVILLE, TN

DATE OF BIRTH DOB Month Day Year

CITIZENSHIP CTZ

SEX RACE HGT. WGT. EYES HAIR

PLACE OF BIRTH POB

YOUR NO. OCA

FBI NO. FBI

ARMED FORCES NO. MNU

SOCIAL SECURITY NO. SOC

MISCELLANEOUS NO. MNU

LEAVE BLANK

CLASS

REF.

1. R. THUMB	2. R. INDEX	3. R. MIDDLE	4. R. RING	5. R. LITTLE
6. L. THUMB	7. L. INDEX	8. L. MIDDLE	9. L. RING	10. L. LITTLE

L. THUMB R. THUMB RIGHT FOUR FINGERS TAKEN SIMULTANEOUSLY

LiveScan/Automated Fingerprint Identification System (AFIS)

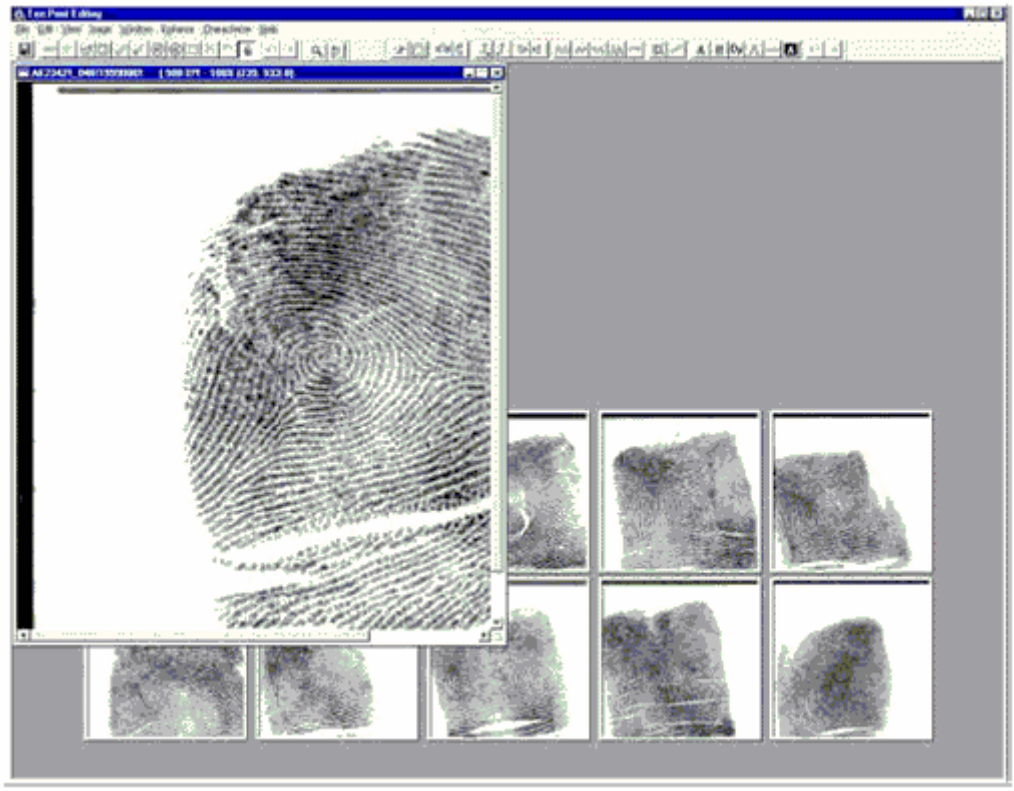

Arrest & Booking: Opportunities for Improvement

The "Opportunities for Improvement" section provides a general list of observations compiled during the ICJ project interview phase. These ideas will be considerations for the development of the "To-Be" Model regarding the **Arrest & Booking** process.

LIVESCAN/AFIS -- Implement LiveScan and AFIS technology at all Booking Agencies in Tennessee. This would promote automated digital fingerprinting, and create efficiencies in searching the TBI's criminal database. It would eliminate the need to submit fingerprints to the TBI via the mail, and reduce paperwork.

AFIS -- Implement process whereby AFIS pushes criminal history to Booking Agencies automatically when a fingerprint match is found. Today, only the State Identification number is returned to the Booking Agencies and a separate query has to be initiated by the Booking Agencies.

RMS -- Determine an agreed upon format to push basic identification information to the various Records Management Systems throughout the Criminal Justice System. There is considerable duplication of effort in entering the same information on each separate system.

GENERAL SESSIONS COURT

General Sessions Court: Process Diagram

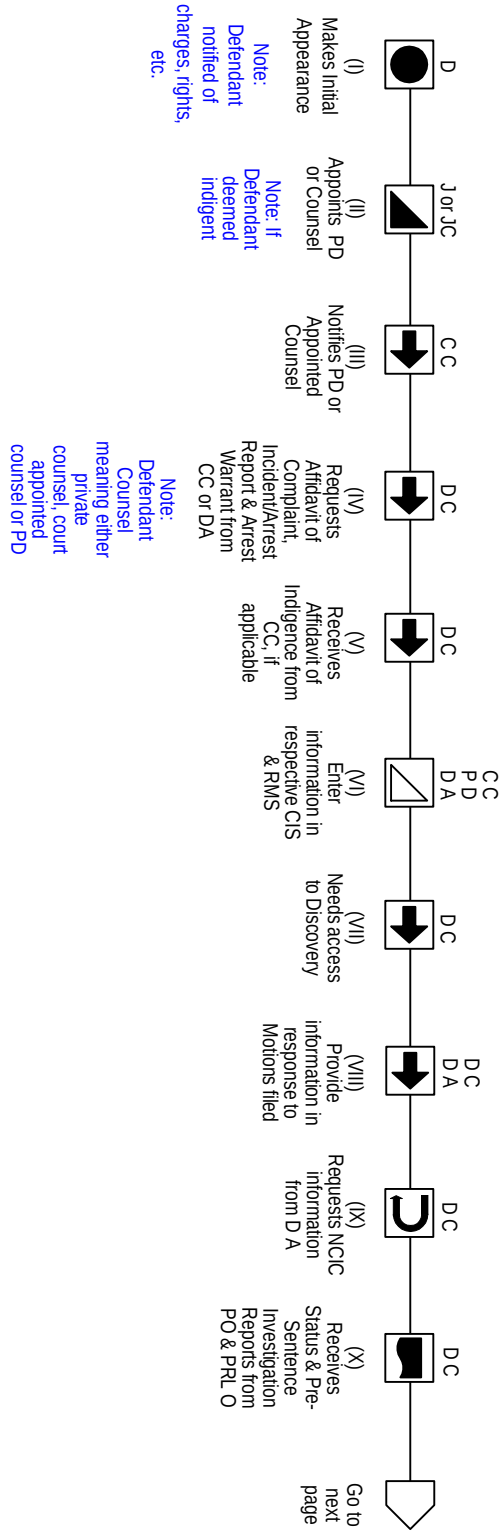

"As-Is" Model: General Sessions Court (Page 2 of 2)

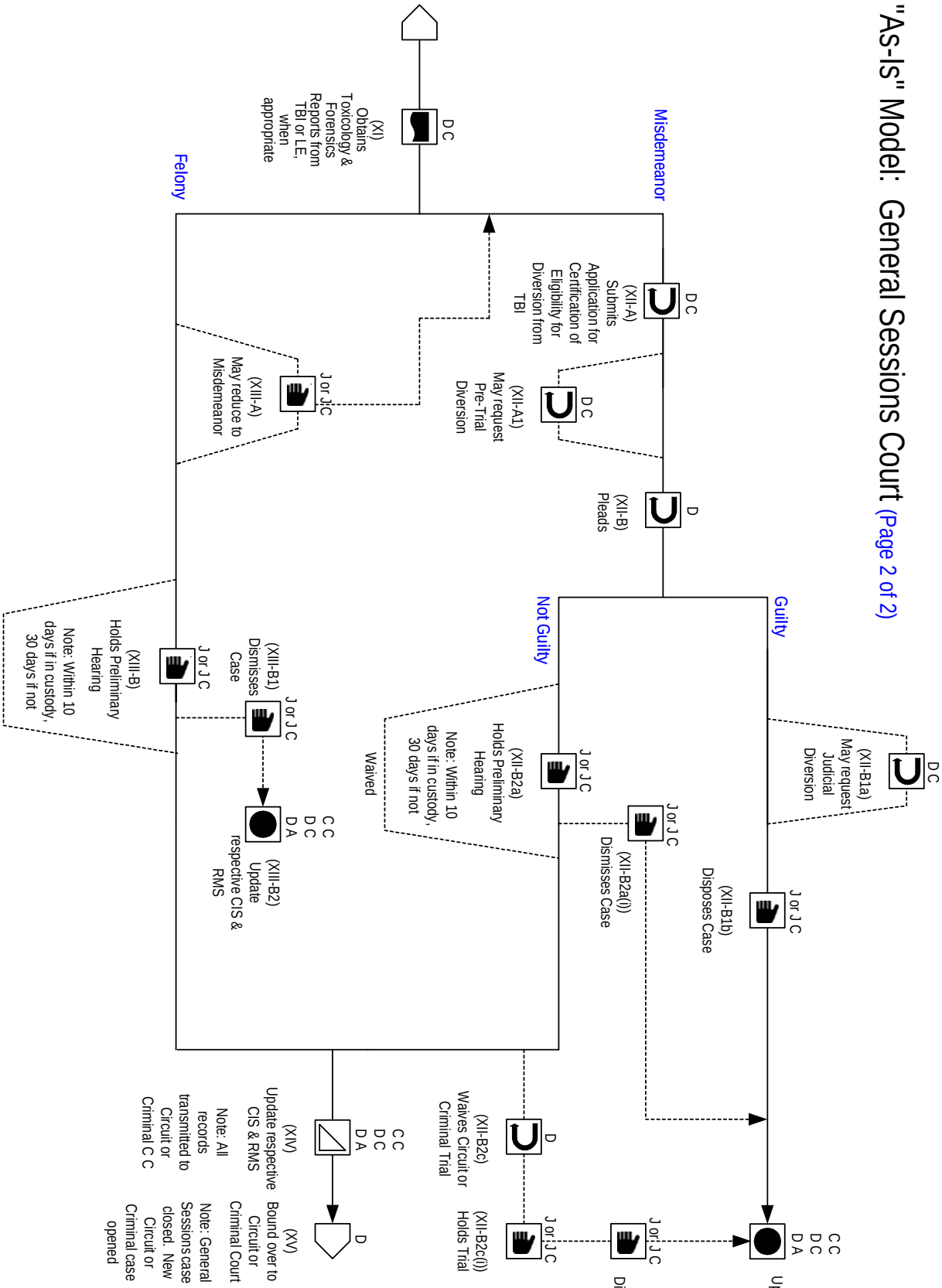

General Sessions Court: Process Overview

Whether a Defendant has been arrested with an Arrest Warrant or asked to appear in court via a Criminal Summons, he must stand before a Judge or Judicial Commissioner (Magistrate or Clerk) for an Initial Appearance without delay (usually within 48 hours). During this Initial Appearance, the Defendant is notified of the charges and all of his rights including the right to Counsel. If the Defendant is determined to be indigent and has not acquired a private attorney, the court will appoint a Public Defender or Private Counsel to represent him in these proceedings.

A Preliminary Hearing to determine Probable Cause may occur in General Sessions Court before a Judge or Judicial Commissioner (Magistrate or Clerk) but the Defendant has the right to waive this Preliminary Hearing. The Defendant may have other options depending on whether the offense charged is a misdemeanor or felony.

If the offense is a misdemeanor, the Defendant can waive the right to a Circuit or Criminal Trial, in which case, the Judge or Judicial Commissioner holds the trial and disposes case. Otherwise, the case will be bound over to Circuit or Criminal Court for disposition.

Felonies cannot be adjudicated in General Sessions Court; therefore, they must be bound over to Circuit or Criminal Court, or reduced to misdemeanors via plea-bargaining.

Key information exchanges that take place during the **General Sessions Court** process are described below:

I. Defendant Makes Initial Appearance

Within approximately 48 hours, a Defendant who has been detained by Law Enforcement has the right to face a Judge or Judicial Commissioner. The Defendant is notified of his charges and rights, including his right to counsel (Private or Public).

II. Judge or Judicial Commissioner Appoints Public Defender or Counsel

If the Defendant is determined to be indigent and has not acquired a private attorney, the court will appoint a Public Defender or Private Counsel to represent him.

III. Court Clerk Notifies Public Defender or Appointed Counsel

The Court Clerk notifies the Public Defender or Court Appointed Counsel of the new Defendant. In some jurisdictions, a Public Defender representative is present at the Initial Appearance and aware of newly appointed counsel.

IV. Defendant Counsel Requests Affidavit of Complaint, Incident/Arrest Report & Arrest Warrant from Court Clerk or District Attorney

Throughout this document, Defendant Counsel is used to indicate either private counsel, court appointed counsel or public defender. Defendant Counsel requests and reviews the Affidavit of Complaint, Incident/Arrest Report and Arrest Warrant from Court Clerk or District Attorney to learn details of the Defendant's charges.

V. Defendant Counsel Receives Affidavit of Indigence from Court Clerk, if Applicable

The Defendant Counsel receives a hard copy of the Affidavit of Indigence from the Court Clerk, if applicable.

VI. Court Clerk, Public Defender and District Attorney Enter Information in Respective Court Information System & Records Management System

The various agencies enter information about the defendant and the case in their respective court information and records management systems.

VII. Defendant Counsel Needs Access to Discovery

Defendant Counsel needs access to Discovery that includes:

- Court information
- Criminal History
- Dispositions
- Driver Information
- Mental Health Information
- NCIC
- Personal Information
- Photos
- Physical Descriptors
- Prior Convictions
- Prison Data
- Respective Case Information
- Witness Information

VIII. Defendant Counsel and District Attorney Provide Information in Response to Motions Filed

Defendant Counsel and District Attorney provide information in response to motions filed by either side.

IX. Defendant Counsel Requests NCIC Information from District Attorney

Defendant Counsel requests NCIC criminal history and warrants information from the District Attorney.

X. Defendant Counsel Receives Status & Pre-Sentence Investigation Reports from Probation & Parole Officers

The Pre-Sentence Investigation is entered on Tennessee Offender Management Information System (TOMIS) and the report is created. If the Offender has previously been incarcerated and a TOMIS ID was assigned, that same ID should be used to enter this new information. Otherwise, a new TOMIS ID is assigned. Defendant Counsel receives and reviews status and Pre-Sentencing Investigation reports from local Probation and Parole Officers.

XI. Defendant Counsel Obtains Toxicology & Forensics Reports from TBI or Law Enforcement, when Appropriate

When appropriate, Defendant Counsel obtains hard copy Toxicology and Forensics reports from the TBI or other Law Enforcement agency.

XII. If Offense is a Misdemeanor

A. DEFENDANT COUNSEL SUBMITS APPLICATION FOR CERTIFICATION OF ELIGIBILITY FOR DIVERSION FROM TBI

Defendant Counsel submits application for certification that defendant has no prior disqualifying Felony or Class A Misdemeanor convictions to the TBI. This form is used in determining eligibility for Pretrial or Judicial Diversion.

1. Defendant Counsel May request Pre-Trial Diversion

Pre-Trial Diversion is a form of probation with conditions that the Defendant must meet. If the conditions are met, the Judge or Judicial Commissioner can dismiss the charges and no record will appear for the Defendant. The Judge or Judicial Commissioner will only accept Diversion if the Defendant has no prior Felony or Class A Misdemeanor convictions and with the District Attorney's approval.

B. DEFENDANT PLEADS

1. If Defendant pleads Guilty

a. Defendant Counsel May request Judicial Diversion

Judicial Diversion is similar to Pre-Trial Diversion above except that the Defendant has pleaded guilty and sentencing is what is held pending the Defendant meeting the conditions set.

b. Judge or Judicial Commissioner Disposes Case

c. Court Clerk, Defendant Counsel and District Attorney update their respective Court Information System and Records Management System

2. If Defendant pleads Not Guilty

a. Judge or Judicial Commissioner holds Preliminary Hearing

The Judge or Judicial Commissioner must hold a Preliminary Hearing to determine probable cause within 10 days if Defendant is in custody, within 30 days if not in custody. The Defendant has the right to waive this Preliminary Hearing.

i. Judge or Judicial Commissioner May Dismiss Case

The Judge or Judicial Commissioner may dismiss the case during the Preliminary Hearing if it is determined that there is no probable cause.

ii. Court Clerk, Defendant Counsel and District Attorney update their respective Court Information System and Records Management System

b. The Defendant May Waive the Preliminary Hearing

c. The Defendant May Waive Trial by Circuit or Criminal Court

i. Judge or Judicial Commissioner holds Trial

ii. Judge or Judicial Commissioner disposes case

iii. Court Clerk, Defendant Counsel and District Attorney update their respective Court Information System and Records Management System

d. Skip forward to XIV. Court Clerk, Defendant Counsel and District Attorney update their respective Court Information System and Records Management System

XIII. If Offense is a Felony

A. JUDGE OR JUDICIAL COMMISSIONER MAY REDUCE CHARGE TO MISDEMEANOR

B. JUDGE OR JUDICIAL COMMISSIONER HOLDS PRELIMINARY HEARING

The Judge or Judicial Commissioner must hold a Preliminary Hearing to determine probable cause within 10 days if Defendant is in custody, within 30 days if not in custody. The Defendant has the right to waive this Preliminary Hearing.

1. Judge or Judicial Commissioner May Dismiss Case

   The Judge or Judicial Commissioner may dismiss the case during the Preliminary Hearing if it is determined that there is no probable cause.

2. Court Clerk, Defendant Counsel and District Attorney update their respective Court Information System and Records Management System

C. THE DEFENDANT MAY WAIVE THE PRELIMINARY HEARING

XIV. Court Clerk, Defendant Counsel and District Attorney Update their Respective Court Information System and Records Management System

XV. The Defendant is Bound Over to Circuit or Criminal Court

The Defendant is bound over to the Circuit or Criminal Court for adjudication. The General Sessions case is closed and a new Circuit or Criminal Court case is opened. All General Sessions records are forwarded to the Circuit or Criminal Court Clerk.

General Sessions Court: Agency Roles & Responsibilities

Agencies involved in the **General Sessions Court** process and their primary information exchange responsibilities are listed below.

Court Clerk's Office

- Issues the Arrest Warrants and Criminal Summons.
- Notifies the District Attorney's Office and Public Defender's Office about their respective assignments to a new case.
- Provides the District Attorney's Office and Public Defender's Office with information about a case.
- Provides copies of Court Appearance Schedules to Law Enforcement Agencies that have custody of Defendants.
- Keeps records of various motions/filings made by the District Attorney's Office and Public Defender's Office.
- Keeps records of the Judge's Findings and other information exchanged during court proceedings.
- Collects and processes completed Case Judgment Documents received from the Judge.
- Distributes copies of completed Case Judgment Documents to the Administrative Office of the Courts, the District Attorney's Office, Department of Correction, and Law Enforcement Agencies (when applicable).
- Submits final disposition information to the TBI (when applicable).
- Collects payments and ensures that Victim(s) receive restitution when a Defendant is ordered to pay fines and/or restitution.
- Captures verbatim record of speeches, conversations, legal proceedings, meetings and other events.

Law Enforcement Agency

- Serves the Arrest Warrants and/or Criminal Summons.
- Takes Offenders to Booking for processing.
- Provides the District Attorney's Office with information about a case, incident/offense, and/or arrest.
- Provides the District Attorney's Office with information about a specific Defendant, Victim, and/or Witness.
- Collects and processes Court Appearance Schedules received from the Court Clerk's Office.
- Collects and processes copies of Case Judgment Documents received from the Court Clerk's Office.
- Submits Final Disposition Report (R-84) information to the TBI.

County Jail

- Collects and processes copy of Case Judgment Document received from the Court Clerk's Office.
- Keeps records of Case Judgment Documents received from the Court Clerk's Office.

District Attorney's Office

- Collects and processes case information received from the Court Clerk's Office.
- Collects and processes case information received from Law Enforcement Agencies.
- Collects and processes information related to a specific Defendant, Victim, and/or Witness received from Law Enforcement Agencies.
- Facilitates plea bargain/agreement proceedings.
- Files various motions/forms with the Court Clerk's Office.
- Presents evidence to a Jury, Judge or Judicial Commissioner.
- Completes and submits drafts of Case Judgment Documents to the Judge.
- Collects and processes copy of Case Judgment Document received from the Court Clerk's Office.

Public Defender's Office

- Receives information related to an assigned case from the Court Clerk's Office.
- Participates in plea agreement/bargain proceedings.
- Represents Defendant at Preliminary Hearing or Trial on merits.
- Collects and files copy of Plea Agreement received from the District Attorney's Office.
- Presents evidence to a Jury, Judge or Judicial Commissioner.
- File various motions/forms with the Court Clerk's Office.

Judge and/or Judicial Commissioner

- Administers court proceedings.
- Reviews information/documents related to a specific case.
- Requests and reviews Pre-Sentence Investigation reports.
- Reviews drafts of Case Judgment Documents submitted by the District Attorney's Office.
- Makes modifications to drafts of Case Judgment Document submitted by the District Attorney's Office (when necessary).
- Records Judicial Notes and Opinions.
- Submits completed Case Judgment Documents to the Court Clerk's Office.

Administrative Office of the Courts

- Collects and processes copies of Case Judgment Documents received from the Court Clerk's Offices.
- Keeps records of felony cases and their corresponding judgment.

General Sessions Court: Information Exchange

The Events that generate inter-agency Information Exchange within the **General Sessions Court** process are shown in the table below.

Information Exchange during the General Sessions Court Process

ID	EVENT	INFORMATION EXCHANGED	SEND AGENCY	RECEIVE AGENCY	METHOD	FREQ
	A new case is assigned to the District Attorney's Office.	Arrest Data Basic ID Data Bond Data Case ID Data Charge Data Contact Data Just. Official ID Data Name Data Offense Data Release Data Schedule Data Warrant Data	Court Clerk	District Attorney	Paper: Affidavit of Complaint Paper: Arrest Warrant Paper: Case File documents Paper: Incident/Offense Report	HIGH
	A new case is assigned to the Public Defender's Office.	Arrest Data Basic ID Data Bond Data Case ID Data Charge Data Contact Data Name Data Offense Data Release Data Schedule Data Social ID Data Warrant Data	Court Clerk	Public Defender	Paper: Affidavit of Complaint Paper: Affidavit of Indigence Paper: Arrest Warrant Paper: Incident/Offense Report	HIGH
	A LEA delivers evidence to a District Attorney's Office.	Arrest Data Booking Data Charge Data Case ID Data Mug Shot Data Name Data Personal ID Data Property Data Social ID Data Vehicle Data Warrant Data	LEA	District Attorney	Paper: Case File documents	HIGH

ID	EVENT	INFORMATION EXCHANGED	SEND AGENCY	RECEIVE AGENCY	METHOD	FREQ
	A Defendant's court appearance schedule is sent to a detention facility.	Basic ID Data Case ID Data Name Data Schedule Data	Court Clerk	LEA	Paper: Report/Schedule *or* Electronic: LEA Records Mgmt. System	HIGH
	A Plea Agreement is reached.	Basic ID Data Case ID Data Charge Data Just. Official ID Data Name Data Plea Data	District Attorney	Public Defender Court Clerk	Paper: Plea Agreement	MED
	A Preliminary Hearing is held.	Arrest Data Basic ID Data Case ID Data Charge Data Name Data Offense Data Property Data	District Attorney	Judge or Judicial Commissioner	Paper: Various Case File Documents, Motions and Orders	HIGH
	A Preliminary Hearing is concluded.	Disposition Data	Judge or Judicial Commissioner	Court Clerk	Paper: Judge's Findings/Orders	HIGH
	A Defendant is indicted.	Basic ID Data Case ID Data Charge Data Disposition Data Name Data Schedule Data	District Attorney	Court Clerk	Paper: Indictment/Charging Decision	HIGH
	A Subpoena is requested.	Address Data Basic ID Data Case ID Data Charge Data Contact Data Justice Official ID Data Property Data Name Data Schedule Data Subpoena Data	District Attorney Public Defender	Court Clerk	Paper: Subpoena	HIGH

ID	EVENT	INFORMATION EXCHANGED	SEND AGENCY	RECEIVE AGENCY	METHOD	FREQ
	Information is collected during a Pre-Sentence Investigation.	Address Data Basic ID Data Case ID Data Charge Data Custody Data Enhanced ID Data Disposition Data Offense Data Name Data Parole Data Plea Data Probation Data Release Data Sentence Data Social ID Data Violation Data	Court Clerk District Attorney LEA TDOC TBI	BOPP	Paper: Various Case File Documents	HIGH
	A Pre-Sentence Investigation is completed.	Address Data Basic ID Data Case ID Data Charge Data Custody Data Enhanced ID Data Disposition Data Offense Data Name Data Parole Data Plea Data Probation Data Release Data Sentence Data Social ID Data Violation Data	BOPP	Judge or Judicial Commissioner District Attorney Defendant Counsel	Electronic: Tennessee Offender Management Information System Paper: Pre-Sentence Investigation Report	HIGH
	A draft of the Case Judgment Document is submitted.	Basic ID Data Charge Data Custody Data Disposition Data Name Data Offense Data Payment Data Plea Data Sentence Data	District Attorney	Judge	Paper: Case Judgment Document (Draft)	HIGH

ID	EVENT	INFORMATION EXCHANGED	SEND AGENCY	RECEIVE AGENCY	METHOD	FREQ
	The final Case Judgment Document is filed.	Basic ID Data Charge Data Custody Data Disposition Data Name Data Offense Data Payment Data Plea Data Sentence Data	Judge	Court Clerk	Paper: Case Judgment Document (Final)	HIGH
	The Case Judgment Document is distributed.	Basic ID Data Charge Data Custody Data Disposition Data Name Data Offense Data Payment Data Plea Data Sentence Data	Court Clerk	AOC District Attorney LEA TDOC	Paper: Case Judgment Document (Copy)	HIGH
	The Final Disposition is reported to the TBI.	Basic ID Data Charge Data Disposition Data Name Data Offense Data Sentence Data	Court Clerk *or* LEA	TBI	Paper: R-84 Final Disposition Card *or* Electronic: Justice Information System (Automated Final Disposition Reporting)	LOW

General Sessions Court: Data Elements

The data elements listed below are exchanged between multiple criminal justice agencies and are essential to the **General Sessions Court** process. See APPENDIX B: DATA ELEMENTS for more details.

ADDR	**Address Data**
ARRS	**Arrest Data**
BASC	**Basic Identification Data**
BOND	**Bond Data**
BOOK	**Booking Data**
CASE	**Case Identification Data**
CHRG	**Charge Data**
CONT	**Contact Data**
CUST	**Custody Data**
DISP	**Disposition Data**
IDEN	**Enhanced Identification Data**
JUST	**Justice Official Identification Data**
MEDI	**Medical Data**
NAME	**Name Data**
OFFN	**Offense Data**
PARO	**Parole Data**
PAYM	**Payment Data**
PERS	**Personal Identification Data**
PLEA	**Plea Data**
PROB	**Probation Data**
PROP	**Property Data**
RLSE	**Release Data**
SCHD	**Schedule Data**
SENT	**Sentence Data**
SOCI	**Social Identification Data**
SUBP	**Subpoena Data**
VIOL	**Violation Data**
WARR	**Warrant Data**

General Sessions Court: Technology

The table below details the primary computer systems and databases used in exchange of information during the **General Sessions Court** process. See Appendix D for more detailed information about computer systems and applications.

General Sessions Court – Technology

NAME	DESCRIPTION
Court Information System (CIS)	A court information system is used to manage the daily affairs of the Court Clerk's office. It contains functionality for Case History, Master Person File, Bill-of-Cost, Case Disposition Rule & Execution, and Reporting System and generates a docket number. Maintained by: Court Clerk's Office
Records Management System (RMS)	A computer system that captures and stores information about a case and promotes an agency's ability to manage its records. Maintained by: District Attorney's Office, Public Defender's Office

General Sessions Court: Forms

ID	FORM NAME	FORM DESCRIPTION
F-10	Affidavit of Indigence	Certifies that a defendant does not have the means to acquire private counsel.
F-11	Application for Certification of Eligibility for Diversion	Form used to certify that defendant has no prior disqualifying felony or misdemeanor convictions in determining eligibility for Pretrial or Judicial Diversion.

Affidavit of Indigence

_____ Court _____ County _____ Tennessee	**UNIFORM AFFIDAVIT OF INDIGENCY – RULE 13** Page 1 of 2	Case Number:
State of Tennessee vs. _____		

Part I

1. Full Name: _____ 2. Social Security No.: _____
3. Any other names ever used: _____ 4. Address: _____
5. Telephone Nos.: Home ( ) _____ Work ( ) _____ Other ( ) _____
6. Are you working anywhere? ❒Yes ❒No If yes, where? _____
7. How much do you make? $_____ ❒ Weekly ❒ Monthly ❒ Etc.
8. Birthday: Month _____ Day _____ Year _____
9. Do you receive any governmental assistance or pensions (disability, SSI, AFDC, etc.)? ❒ Yes ❒ No
   What is its value $_____ Month: _____ Day: _____ Year: _____
10. Do you own any property (house, car, bank account, etc.)? ❒ Yes ❒ No
    What is its value? $_____
11. Are you, or your family, going to be able to post your bond? ❒ Yes ❒ No
12. Are you, or your family, going to hire a private attorney? ❒ Yes ❒ No
13. Are you now in custody? ❒ Yes ❒ No If so, how long have you been in custody? _____

(If the defendant is in custody, unable to make bond and the answers to questions one (1) through eleven (11) make it clear that the defendant has no resources to hire a private attorney, skip Part II and complete Part III. If Part II is to be completed, do not list items already listed in Part I.)

PART II

14. Names and ages of all dependents: _____ Relationship: _____
    _____ Relationship: _____
    _____ Relationship: _____
15. I have met with following lawyer(s), have attempted to hire said lawyer(s) to represent me, and have been unable to do so:
    Name: _____ _____
    Address: _____ _____
16. All of my income from all sources (including, but not limited to wages, interest, gifts, AFDC, SSI, social security, retirement, disability, pension, unemployment, alimony, worker's compensation, etc.):
    $_____ per _____ from _____
    $_____ per _____ from _____
    $_____ per _____ from _____
17. All money available to me from any source:
    A. Cash _____
    B. Checking, Savings, or CD Account(s) – give bank, account no., balance _____
    C. Debts owed me _____
    D. Credit Card(s) – give account no., balance, credit limit, and type (Visa, MasterCard, American Express, etc.)
    _____
18. All vehicles/vessels owned by me, solely or jointly, within the last six months (including but not limited to cars, trucks, motorcycles, farm equip., boats, etc.):
    _____ Value: $_____ Amt. Owed $_____
    _____ Value: $_____ Amt. Owed $_____
    _____ Value: $_____ Amt. Owed $_____

Affidavit of Indigence (Continued)

_____ Court _____ County _____ Tennessee	**UNIFORM AFFIDAVIT OF INDIGENCY** **Page 2 of 2**	Case Number:
State of Tennessee vs. _____		

19. All real estate owned by me, solely or jointly, within the last six months) including land, lots, houses, mobile homes, etc.):
_____ Value: $ _____ Amt. Owed $ _____
_____ Value: $ _____ Amt. Owed $ _____
20. All assets or property not already listed owned within the last six months or expected in the future:
_____ Value: $ _____ Amt. Owed $ _____
_____ Value: $ _____ Amt. Owed $ _____
21. The last income tax return I filed was for the year _____ and it reflected a net income of $ _____
I will file a copy of same within one week if required.
22. I am out of jail on bond of $ _____ Made by _____
The money to make bond, $ _____ was paid by _____

PART III

23. Acknowledging that I am still under oath, I certify that I have listed in Parts I and II all assets in which I hold or expect to hold any legal or equitable interest.
24. I am financially unable to obtain the assistance of a lawyer and request the court to appoint a lawyer for me.
25. I understand that **it is a Class A misdemeanor** for which I can be sentenced to jail for up to 11 months 29 days or be fined up to $2500 or both **if I intentionally or knowingly misrepresent, falsify, or withhold any information required in this affidavit.** I also understand that I may be required by the Court to produce other information in support of my request for an attorney.

Date: _____

_____
Defendant's Signature

Sworn to and subscribed before me this day: _____

_____
Clerk/Deputy Clerk - Circuit Court

_____
Circuit Criminal Court Judge

Application for Certification of Eligibility for Diversion

APPLICATION FOR CERTIFICATION OF ELIGIBILTY FOR DIVERSION

COUNTY	COURT ☐ Circuit ☐ Criminal ☐ Sessions	DIVISION	JUDGE
DEFENDANT'S NAME			COURT DATE
DATE OF BIRTH	SEX/RACE (B / I / A / W)	SOCIAL SECURITY NUMBER	TYPE OF DIVERSION ☐ Pretrial ☐ Judicial

OFFENSES TO BE DIVERTED:

1. _____ Date of Arrest: ___/___/___ ☐ Felony ☐ Misdemeanor
2. _____ Date of Arrest: ___/___/___ ☐ Felony ☐ Misdemeanor
3. _____ Date of Arrest: ___/___/___ ☐ Felony ☐ Misdemeanor

NAME AND PHONE NUMBER OF DISTRICT ATTORNEY OR ASSISTANT DISTRICT ATTORNEY TO WHOM RESPONSE SHOULD BE SENT

FAX NUMBER	ADDRESS

CERTIFICATION OF ELIGIBILITY FOR DIVERSION

I hereby certify that, pursuant to Tenn. Code Ann. §39-6-118(b), a query of the TBI Expunged Criminal Offender and Pretrial Diversion Database has been conducted pursuant to the above authorized request, and based upon the results of that query:

1. [ ] The defendant has not had a prior disqualifying felony or misdemeanor conviction.
   [ ] The defendant has a prior disqualifying felony or misdemeanor conviction.
   [ ] The defendant has a prior arrest for which no disposition has been entered.

2. [ ] The defendant has not previously been granted diversion.
   [ ] The defendant has been granted diversion before.

3. [ ] The defendant has not had an order expunging the public records of a criminal offense foll on behalf of said defendant.
   [ ] The defendant has had an order expunging the public records of a criminal offense following the dismissal of charges entered on behalf of said defendant.

_____ _____

Records Processing Unit, TBI Date

PLEASE NOTE THAT THIS DOES NOT CONSTITUTE A CERTIFICATION THAT THE DEFENDANT IS ELIGIBLE OR INELIGIBLE FOR DIVERSION UNDER TCA 40-35-313 OR TCA 40-15-105. THIS IS ONLY A CERTIFICATION THAT A RECORDS CHECK OF THE TBI EXPUNGED CRIMINAL OFFENDER AND PRETRIAL DIVERSION DATABASE HAS REVEALED QUALIFYING OR DISQUALIFYING INFORMATION UNDER THE CRITERIA SET OUT IN THE DIVERSION STATUTES REFERENCED ABOVE.

JUDGMENT OF PRETRIAL DIVERSION OR JUDICIAL DIVERSION

Comes now the District Attorney General for the State and Defendant with counsel of record for entry of judgment.

On the _____ day of _____

OFFENSE INDICTED	OFFENSE CLASS
OFFENSE DIVERTED	OFFENSE CLASS

The defendant is sentenced to [ ] pretrial diversion [ ] judicial diversion for the following period:

_____ years, _____ months, _____ days. Effective: _____

_____	_____	___/___/___
JUDGE (Printed)	JUDGE (Signature)	ENTRY OF JUDGMENT DATE
_____	_____	_____
APPROVED FOR ENTRY	DISTRICT ATTORNEY	ATTORNEY FOR DEFENDANT.

BI-XXXXX
Rev. 08/02

General Sessions Court: Opportunities for Improvement

The "Opportunities for Improvement" section provides a general list of observations compiled during the ICJ project interview phase. These ideas will be considerations for the development of the "To-Be" Model regarding the **General Sessions Court** process.

INTEGRATE COURT INFORMATION SYSTEM & RECORDS MANAGEMENT SYSTEM – Improve these systems to allow sharing of duplicate information. This would eliminate duplicate entry of information and keying errors.

CIRCUIT OR CRIMINAL COURT

Circuit or Criminal Court: Process Diagram

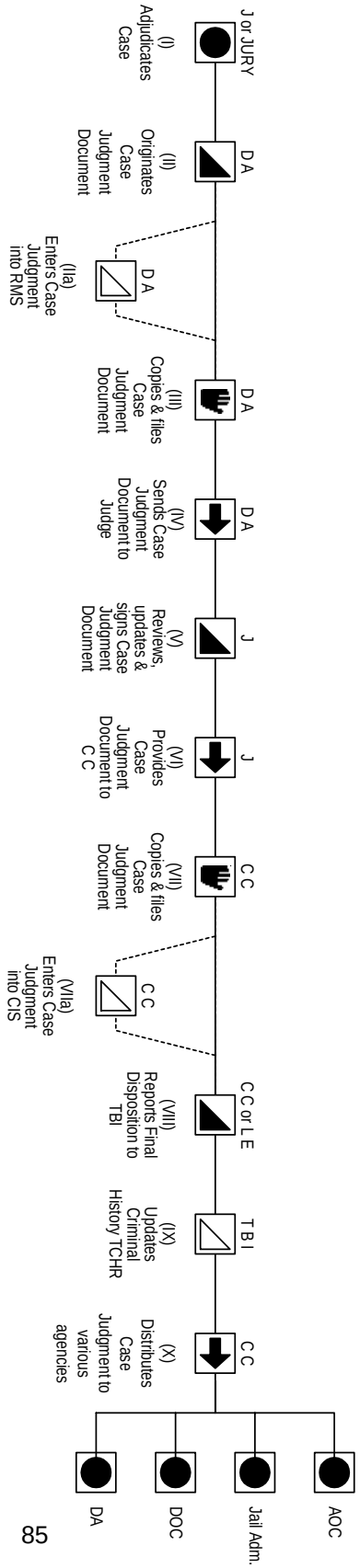

Circuit or Criminal Court: Process Overview

The purpose of the As-Is Model is to highlight the information exchanges that occur between state, county and/or municipal criminal justice agencies. There are many internal processes within an organization that can be improved with technology or reengineering that we will not cover in this document. The court system is very complex in nature, and has an abundance of variables that affect its internal processes. In this section, we will only look at the processes that initiate data exchanges with agencies outside of the court.

Key information exchange events that occur during the **Circuit or Criminal Court** process are described below.

I. Judge or Jury Adjudicates Case

During a criminal trial, the District Attorney and the Public Defender present evidence to a Jury and/or Judge, witnesses testify, and closing statements are made.

If the defendant is found "not guilty," the case is dismissed. When a "guilty" verdict is reached, the Judge sets a sentencing date.

Prior to sentencing, the Judge will request that Probation & Parole perform a Pre-Sentence Investigation. This includes research of criminal history resources, Law Enforcement Agencies, employers, victims, family members and witnesses. The Pre-Sentence Investigation results and sentencing recommendations are made before the Judge.

At the Sentencing Hearing, the Defendant is given his sentence. If the Defendant is given Probation in lieu of incarceration, the Judge completes the Order of Probation form.

The Court Clerk's Office, the District Attorney's Office, and the Public Defender's Office record the sentence.

II. District Attorney Originates Case Judgment Document

The District Attorney's Office records the verdict and sentencing information on the Case Judgment Document.

b. The District Attorney’s Office enters information from the Case Judgment Document into their Records Management System.

III. District Attorney Copies and Files Case Judgment Document

The District Attorney’s Office makes copies of the Case Judgment Document and files the document in their file cabinet.

IV. District Attorney Sends Case Judgment Document to Judge

The District Attorney's Office sends the draft of the Case Judgment Document to the Judge.

V. Judge Reviews, Updates and Signs Case Judgment Document

The Judge reviews the case judgment document draft, makes any modifications deemed necessary, documents associated notes and signs the Case Judgment Document.

VI. Judge Provides Case Judgment Document to Court Clerk

The Judge sends the signed Case Judgment Document and the associated notes to the Court Clerk's Office.

VII. Court Clerk Copies and Files Case Judgment Document

The Court Clerk's Office makes copies of the Case Judgment Document and files the original in a file cabinet.

c. The Court Clerk's Office enters the judgment and sentencing data into the Court Clerk's Court Information System.

VIII. Court Clerk or Law Enforcement Reports Final Disposition to TBI

Upon receipt of a Case Judgment Document, the Court Clerk's Office or the Booking Agency completes a Final Disposition Report (R-84) form. The R-84 is sent to the TBI. The Booking Agency is responsible to send the R-84 to the TBI.

IX. Tennessee Bureau of Investigation Updates Criminal History (TCHR)

Upon receipt of a Final Disposition Report (R-84), the TBI updates the Tennessee Criminal History Repository record with the final disposition information. If the TBI personnel have any questions about the R-84, they have to contact the Court Clerk's Office to clarify the data on the form.

X. Court Clerk Distributes Case Judgment Document to Various Agencies

The Court Clerk's Office sends copies of the Case Judgment Document to the Administrative Office of the Courts, Jail Administrators (when appropriate), Department of Correction and District Attorney's Office.

The Administrative Office of the Courts, Jail Administrators, Tennessee Department of Correction and District Attorney's Office enter judgment and sentencing data into their respective Records Management Systems.

Circuit or Criminal Court: Agency Roles & Responsibilities

Agencies involved in the **Circuit or Criminal Court** process and their primary information exchange responsibilities are listed below.

Administrative Office of the Courts

- Collects and processes copies of Case Judgment Documents received from the Court Clerk's Offices.
- Keeps records of felony cases and their corresponding judgment.

Board of Probation & Parole

- Completes and provides Pre-Sentence Investigation Reports to the Judge.

Court Clerk's Office

- Notifies the District Attorney's Office and Public Defender's Office about their respective assignments to a new case.
- Provides the District Attorney's Office and Public Defender's Office with information about a case.
- Provides copies of Court Appearance Schedules to Law Enforcement Agencies that have custody of Defendants.
- Keeps records of various motions/filings made by the District Attorney's Office and Public Defender's Office.
- Keeps records of the Judge's Findings and other information exchanged during court proceedings.
- Collects and processes completed Case Judgment Documents received from the Judge.
- Distributes copies of completed Case Judgment Documents to the Administrative Office of the Courts, the District Attorney's Office, Department of Correction, and Law Enforcement Agencies (when applicable).
- Submits final disposition information to the TBI (when applicable).
- Collects payments and ensures that Victim(s) receive restitution when a Defendant is ordered to pay fines and/or restitution.
- Captures verbatim record of speeches, conversations, legal proceedings, meetings and other events.

Department of Correction

- Collects and processes copy of Case Judgment Document received from the Court Clerk's Office.
- Keeps records of Case Judgment Documents received from the Court Clerk's Office.

District Attorney's Office

- Collects and processes case information received from the Court Clerk's Office.
- Collects and processes case information received from Law Enforcement Agencies.

- Collects and processes information related to a specific Defendant, Victim, and/or Witness received from Law Enforcement Agencies.
- Facilitates plea bargain/agreement proceedings.
- Files various motions/forms with the Court Clerk's Office.
- Presents evidence to a Jury and/or Judge.
- Completes and submits drafts of Case Judgment Documents to the Judge.
- Collects and processes copy of Case Judgment Document received from the Court Clerk's Office.

Law Enforcement Agency

- Provides the District Attorney's Office with information about a case, incident/offense, and/or arrest.
- Provides the District Attorney's Office with information about a specific Defendant, Victim, and/or Witness.
- Collects and processes Court Appearance Schedules received from the Court Clerk's Office.
- Collects and processes copies of Case Judgment Documents received from the Court Clerk's Office.
- Submits Final Disposition Report (R-84) information to the Tennessee Bureau of Investigation.

Judge

- Administers court proceedings.
- Reviews information/documents related to a specific case.
- Requests and reviews Pre-Sentence Investigation reports.
- Reviews drafts of Case Judgment Documents submitted by the District Attorney's Office.
- Makes modifications to drafts of Case Judgment Document submitted by the District Attorney's Office (when necessary).
- Records Judicial Notes and Opinions.
- Submits completed Case Judgment Documents to the Court Clerk's Office.

Public Defender's Office

- Receives information related to an assigned case from the Court Clerk's Office.
- Participates in plea agreement/bargain proceedings.
- Collects and files copy of Plea Agreement received from the District Attorney's Office.
- Presents evidence to a Jury and/or Judge.
- File various motions/forms with the Court Clerk's Office.

Circuit or Criminal Court: Information Exchange

The Events that generate inter-agency Information Exchange within the **Circuit or Criminal Court** process are shown in the table below.

Information Exchange during the Circuit or Criminal Court Process

ID	EVENT	INFORMATION EXCHANGED	SEND AGENCY	RECEIVE AGENCY	METHOD	FREQ
	A new case is assigned to the District Attorney's Office.	Arrest Data Basic ID Data Bond Data Case ID Data Charge Data Contact Data Just. Official ID Data Name Data Offense Data Release Data Schedule Data Warrant Data	Court Clerk	District Attorney	Paper: Affidavit of Complaint Paper: Arrest Warrant Paper: Case File documents Paper: Incident/Offense Report	HIGH
	A new case is assigned to the Public Defender's Office.	Arrest Data Basic ID Data Bond Data Case ID Data Charge Data Contact Data Name Data Offense Data Release Data Schedule Data Social ID Data Warrant Data	Court Clerk	Public Defender	Paper: Affidavit of Complaint Paper: Affidavit of Indigence Paper: Arrest Warrant .	HIGH
	A LEA delivers evidence to a District Attorney's Office.	Arrest Data Booking Data Charge Data Case ID Data Mug Shot Data Name Data Personal ID Data Property Data Social ID Data Vehicle Data Warrant Data	LEA	District Attorney	Paper: Case File documents	HIGH

ID	EVENT	INFORMATION EXCHANGED	SEND AGENCY	RECEIVE AGENCY	METHOD	FREQ
	A Defendant's court appearance schedule is sent to a detention facility.	Basic ID Data Case ID Data Name Data Schedule Data	Court Clerk	LEA	Paper: Report/Schedule *or* Electronic: LEA Records Mgmt. System	HIGH
	A plea agreement is reached.	Basic ID Data Case ID Data Charge Data Just. Official ID Data Name Data Plea Data	District Attorney	Public Defender Court Clerk	Paper: Plea Agreement	MED
	A Preliminary Hearing is held.	Arrest Data Basic ID Data Case ID Data Charge Data Name Data Offense Data Property Data	District Attorney	Judge	Paper: Various Case File Documents, Motions and Orders	HIGH
	A Preliminary Hearing is concluded.	Disposition Data	Judge	Court Clerk	Paper: Judge's Findings/Orders	HIGH
	A Defendant is indicted.	Basic ID Data Case ID Data Charge Data Disposition Data Name Data Schedule Data	District Attorney	Court Clerk	Paper: Indictment/Charging Decision	HIGH
	A subpoena is requested.	Address Data Basic ID Data Case ID Data Charge Data Contact Data Just. Official ID Data Property Data Name Data Schedule Data Subpoena Data	District Attorney Public Defend.	Court Clerk	Paper: Subpoena	HIGH

ID	EVENT	INFORMATION EXCHANGED	SEND AGENCY	RECEIVE AGENCY	METHOD	FREQ
	Information is collected during a Pre-Sentence investigation	Address Data Basic ID Data Case ID Data Charge Data Custody Data Enhanced ID Data Disposition Data Offense Data Name Data Parole Data Plea Data Probation Data Release Data Sentence Data Social ID Data Violation Data	Court Clerk District Attorney LEA TDOC TBI	BOPP	Paper: Various Case File Documents	HIGH
	A Pre-Sentence investigation is completed.	Address Data Basic ID Data Case ID Data Charge Data Custody Data Enhanced ID Data Disposition Data Offense Data Name Data Parole Data Plea Data Probation Data Release Data Sentence Data Social ID Data Violation Data	BOPP	Judge District Attorney Defendant Counsel	Electronic: Tennessee Offender Management Information System Paper: Pre-Sentence Investigation Report	HIGH
	A draft of the case judgment document is submitted.	Basic ID Data Charge Data Custody Data Disposition Data Name Data Offense Data Payment Data Plea Data Sentence Data	District Attorney	Judge	Paper: Case Judgment Document (Draft)	HIGH

ID	EVENT	INFORMATION EXCHANGED	SEND AGENCY	RECEIVE AGENCY	METHOD	FREQ
	The final case judgment document is filed for distribution.	Basic ID Data Charge Data Custody Data Disposition Data Name Data Offense Data Payment Data Plea Data Sentence Data	Judge	Court Clerk	Paper: Case Judgment Document (Final)	HIGH
	The Case Judgment Document is distributed.	Basic ID Data Charge Data Custody Data Disposition Data Name Data Offense Data Payment Data Plea Data Sentence Data	Court Clerk	AOC District Attorney LEA TDOC	Paper: Case Judgment Document (Copy)	HIGH
	The final disposition is reported to the TBI.	Basic ID Data Charge Data Disposition Data Name Data Offense Data Sentence Data	Court Clerk *or* LEA	TBI	Paper: R-84 Final Disposition Card *or* Electronic: Justice Information System (Automated Final Disposition Reporting)	LOW

Circuit or Criminal Court: Data Elements

The data elements listed below are exchanged between multiple criminal justice agencies and are essential to the **Circuit or Criminal Court** process. See APPENDIX B: DATA ELEMENTS for more details.

ADDR **Address Data**
ARRS **Arrest Data**
BASC **Basic Identification Data**
BOND **Bond Data**
BOOK **Booking Data**
CASE **Case Identification Data**
CHRG **Charge Data**
CONT **Contact Data**
CUST **Custody Data**
DISP **Disposition Data**
IDEN **Enhanced Identification Data**
JUST **Justice Official Identification Data**
MEDI **Medical Data**
NAME **Name Data**
OFFN **Offense Data**
PARO **Parole Data**
PAYM **Payment Data**
PERS **Personal Identification Data**
PLEA **Plea Data**
PROB **Probation Data**
PROP **Property Data**
RLSE **Release Data**
SCHD **Schedule Data**
SENT **Sentence Data**
SOCI **Social Identification Data**
SUBP **Subpoena Data**
VIOL **Violation Data**
WARR **Warrant Data**

Circuit or Criminal Court: Technology

The table below details the primary computer systems and databases used in exchange of information during the **Circuit or Criminal Court** process. See Appendix D for more detailed information about computer systems and applications.

Circuit or Criminal Court – Technology

NAME	DESCRIPTION
Case Management System (CMS)	A case management system is used to manage the proceedings of a court case. Attorneys from the District Attorney's Office and the Public Defender's Office often use it. Maintained by: District Attorney's Office, Public Defender's Office
Court Information System (CIS)	A court information system is used to manage the daily affairs of the court clerk's office. It contains functionality for Case History, Master Person File, Bill-of-Cost, Case Disposition Rule & Execution, and Reporting System and generates a docket number. Maintained by: Court Clerk's Office
Records Management System (RMS)	A computer system that captures and stores information about a case and promotes an agency's ability to manage its records. Maintained by: Administrative Office of the Courts, Law Enforcement Agency, Detention Facility, District Attorney's Office

Circuit or Criminal Court: Forms

ID	FORM NAME	FORM DESCRIPTION
F-12	Case Judgment Document	The Judgment Sheet is generated by the District Attorney, and is completed by the court upon the final sentencing of the Defendant.
F-13	R-84 Final Disposition Report	The Booking agency has to provide the Final Disposition on this card and provide to the TBI.
F-14	Order of Probation	There are times when the judge issues a suspended sentence and places a Defendant on Probation. In some judicial districts, the judge completes a Probation form rather than the Judgment Sheet.

Case Judgment Document

IN THE CRIMINAL/CIRCUIT COURT OF _____COUNTY, TENNESSEE

Case Number: _____ Count # _____ Attorney for the State: _____

Judicial District: _____ Judicial Division: _____ Counsel for Defendant: _____

State of Tennessee ☐ Retained ☐ Appointed ☐ Public Defender

vs.

Defendant: _____ Alias: _____

Date of Birth: _____ Sex: _____ Race: _____ SSN: _____

Indictment Filing Date: _____ TDOC # _____ TBI Document Control # _____

JUDGMENT

Comes the District Attorney General for the State and the defendant with counsel of record for entry of judgment.

On the _____ day of _____, _____, the defendant:

☐ Pled Guilty ☐ Dismissed/Nolle Prosequi ☐ Nolo Contendere ☐ Retired/Unapprehended Defendant ☐ Guilty Plea – Pursuant to 40-35-313 Is found: ☐ Guilty ☐ Not Guilty ☐ Jury Verdict ☐ Not Guilty by Reason of Insanity ☐ Bench Trial	**Indictment:** Class (circle one) 1st A B C D E ☐ Felony ☐ Misdemeanor Offense: _____ Amended Charge: _____ Offense Date: _____ County: _____ Conviction Offense: _____ TCA #: _____ Sentence Imposed Date: _____ **Conviction**: Class (circle one) 1st A B C D E ☐ Felony ☐ Misdemeanor

After considering the evidence, the entire record, & all factors in T.C.A. Title 40 Chapter 35, all of which are incorporated by reference herein, the Court's findings & ruling

Sentence Reform Act of 1989 Offender Status (Check One)	Release Eligibility (Check One)	**Concurrent wit**	**Pretrial Jail Credit Period(s):**
☐ Mitigated ☐ Standard ☐ Multiple ☐ Persistent ☐ Career ☐ Repeat Violent	☐ Mitigated 20% ☐ Multiple Rapist 100% ☐ Mitigated 30% ☐ Child Rapist 100% ☐ Standard 30% ☐ Repeat Violent 100% ☐ Multiple 35% ☐ 1st Degree Murder ☐ Persistent 45% ☐ School Zone ☐ Career 60% ☐ Gang Related ☐ Violent 100%	**Consecutive to:**	From _____ to _____ From _____ to _____ From _____ to _____ From _____ to _____

Sentenced To: ☐ TDOC ☐ County Jail ☐ Workhouse

Sentence Length: _____Years _____Months _____Days _____Hours _____Weekends ☐ Life ☐ Life w/out Parole ☐ Death

Mandatory Minimum Sentence Length: _____39-17-417, 39-13-513, 39-13-514 in School Zone *or* _____55-10-401 DUI 4th Offense

Period of incarceration to be served prior to release on probation: _____Months _____Days _____Hours _____Weekends

Minimum service prior to eligibility for work release, furlough, trusty status and rehabilitative programs: _____% (Misdemeanor Only)

Alternative Sentence: ☐ Probation ☐ Diversion ☐ Community Bas

_____Years _____Months _____Days Effective. _____

Court Ordered Fees and Fines:	**Restitution**:Victim Name _____
$ _____ Criminal Injuries Compensation Fund	Address _____
$ _____ Sex Offender Tax	_____
$ _____ Court Costs **Cost to be Paid by**	Total Amount $_____ Per Month $_____
$ _____ Fine Assessed ☐ Defendant ☐ State	
$ _____ Other:_____	☐ Unpaid Community Service: _____Hours _____Days _____Weeks _____Months

☐ The Defendant having been found guilty is rendered infamous and ordered to provide a biological specimen for the purpose of DNA analysis.

Special Conditions ☐ Pursuant to 39-13-524 the defendant is sentenced to community supervision for life following sentence expiration.

_____ _____ _____

Judge's Name Judge's Signature Date of Entry of Judgment

_____ _____

Attorney for State/Signature (optional) Defendant's Attorney/Signature (optional)

CR-3419 (Rev. 3/03) White – Criminal Court Clerk Canary – TN Dept. of Correction/SMS Pink – AOC Goldenrod – Jail RDA 1167

R-84 Final Disposition-Green Sheet

R-84 (Rev. 7-1-96)

FINAL DISPOSITION REPORT

Leave Blank

Note: This vital report must be prepared on each individual whose arrest fingerprints have been forwarded to the FBI Criminal Justice Information Services Division without final disposition noted thereon. If no final disposition is available to arresting agency, also obtain subject's right four finger impressions on this form, complete left side and forward the form when case referred to prosecutor and/or courts. Agency on notice as to final disposition should complete this form and submit to: **FBI, CJIS Division, Clarksburg, WV 26306.**

(See instructions on **reverse side**)

FBI No.

Name on Fingerprint Card Submitted to FBI
Last First Middle

Date of Birth _____ Sex _____

Henry Fingerprint Classification _____
From FBI 1-B Response

State Bureau No. (SID)

Social Security No. (SOC)

Contributor of Fingerprints (Include **complete** name and location of agency, together with ORI number.)

Arrest No. (OCA)

Date Arrested or Received

Offenses Charged at Arrest

Final Disposition & Date
(If convicted or subject pleaded guilty to lesser charge, include this modification with disposition.)

This Form Submitted By:
(Name, Title, Agency, ORI No., City & State)

Signature Date

Title

☐ COURT ORDERED EXPUNGEMENT:
Return Arrest Fingerprint Card to Contributing Agency;
Certified or Authenticated Copy of Court Order Attached.

Right Four Fingers Taken Simultaneously

If additional space is needed, check ☐ and continue on reverse side of this form.

R-84 Final Disposition-Green Sheet (Continued)

INSTRUCTIONS

1. The purpose of this report is to record the initial data of an individual's arrest and thereafter secure the **final disposition** of the arrest at the earliest possible time from either the arresting agency, the prosecutor or the court having jurisdiction. (INTERIM DISPOSITION INFORMATION, e.g., RELEASED ON BOND, SHOULD NOT BE SUBMITTED.) The SUBJECT'S NAME, CONTRIBUTOR AND ARREST NUMBER should be exactly the same as they appear on the fingerprint card IN THE FILES OF THE FBI. The FBI number should be indicated, if known. Agency ultimately making final disposition will complete and mail form to: **FBI Criminal Justice Information Services Division, Clarksburg, WV 26306.**

2. **The arresting agency** should fill in all arrest data on left side of form and obtain the finger impressions of the right four fingers simultaneously. This should be done at the same time as the full set of fingerprints are taken on the arrest fingerprint card. If the arrest is disposed of by the arresting agency, as where the arrestee is released without charge, then the arresting agency should fill in this final disposition and mail form to FBI Criminal Justice Information Services Division. Of course, if final disposition is known when arrest fingerprint card is submitted it should be noted thereon and this form is then unnecessary. In the event the case goes to the prosecutor, this form should be forwarded to the prosecutor with arrestee's case file.

3. **The prosscutor** should complete the form to show final disposition at the prosecution level if the matter is not being referred for court action and thereafter submit form directly to FBI Criminal Justice Information Services Division. If court action required, the prosecutor should forward form with case file to court having jurisdiction.

4. **The court** should complete this form as to final court disposition such as when arrested person is acquitted, case is dismissed, on conviction and when sentence imposed or sentence suspended and person placed on probation.

5. When arrested person convicted or enters guilty to lesser or different offense than that charged when originally arrested, this information should be clearly indicated.

6. If subsequent action taken to seal or expunge record, attach certified or authenticated copy of court order to this form so that FBI can retrun arrestee's fingerprints to original contributor.

7. It is **vitally important** for completion of subject's record in the FBI Criminal Justice Information Services Division files that **Final Disposition Report** be submitted in every instance where fingerprints previously forwarded without final disposition noted thereon.

FOR ADDITIONAL INFORMATION

FPI-8ST

Order of Probation

IN THE GENERAL SESSIONS CRIMINAL COURT
SHELBY COUNTY, TENNESSEE
DIVISION _____

STATE OF TENNESSEE

VS.

_____
DEFENDANT

BOOKING NO. _____

CHARGE: _____

_____

SUPPLEMENTAL ORDER OF PROBATION

This cause came on to be heard before the undersigned Judge, the above named defendant having entered a plea of guilty or having been convicted of an offense defined in Tennessee Code Annotated, Title 38, Chapter 13, in which the victim of the offense is a family or household member, as defined in Tennessee Code Annotated, Section 36-3-601. It appearing that the above named defendant is a good candidate to have all or part of the term of incarceration suspended and to be placed on probation. In consideration of the safety and protection of the victim of such offense and of any other member of the victim's family or household, this probation is conditioned upon compliance with one or more of the following conditions in addition to the conditions normally imposed with probation.

_____The probationer is enjoined from threatening to commit or committing acts of violence against the victim or other household members;

_____The probationer is prohibited from harassing, annoying, telephoning, contacting or otherwise communicating, either directly or indirectly, with the victim;

_____The probationer is required to stay away from the residence, school, place of employment or a specified place frequented regularly by the victim and by any designated family or household member;

_____The probationer is prohibited from possessing or consuming alcohol or controlled substances, and;

_____The probationer is prohibited from using or possessing a firearm or any other specified weapon and is required to surrender and forfeit any weapon currently possessed;

_____The probationer shall abide by the following special conditions of probation:_____

_____

_____

Entered this the _____day of _____, yr._____.

_____
JUDGE

I, the above named defendant, have read or have had read to me the foregoing Supplemental Order of Probation. I full understand the Order and agree to comply with the terms and conditions set forth therein during my probationary period.

_____
ATTORNEY FOR PROSECUTION

_____
PROBATIONER

_____
ATTORNEY FOR DEFENDANT

_____
ADDRESS

_____
B. P. R. NUMBER

_____
PHONE NUMBER

Circuit or Criminal Court: Opportunities for Improvement

The "Opportunities for Improvement" section provides a general list of observations compiled during the ICJ project interview phase. These ideas will be considerations for the development of the "To-Be" Model regarding the Circuit or Criminal Court process.

AUTOMATED CASE JUDGMENT DOCUMENT -- The Case Judgment Document is a key document in Tennessee's criminal justice process. In the current state, the Judgment Sheet is created by hand on a standard form. The information that is contained on the Case Judgment Document is copied and delivered by the Court Clerks office to multiple agencies. It is then re-keyed in to multiple agency systems. Many of the documents are illegible, contradictory, misleading or require extensive analysis. Automating the creation, electronic transfer of the information contained within and the digital imaging of the Case Judgment Document could enhance this process and save the state time and money.

INTEGRATE CAIN - Improve the CAIN system to provide an integrated Case Management functionality for the State of Tennessee. Improve the security and scalability of the system.

PROBATION

Probation: Process Diagram

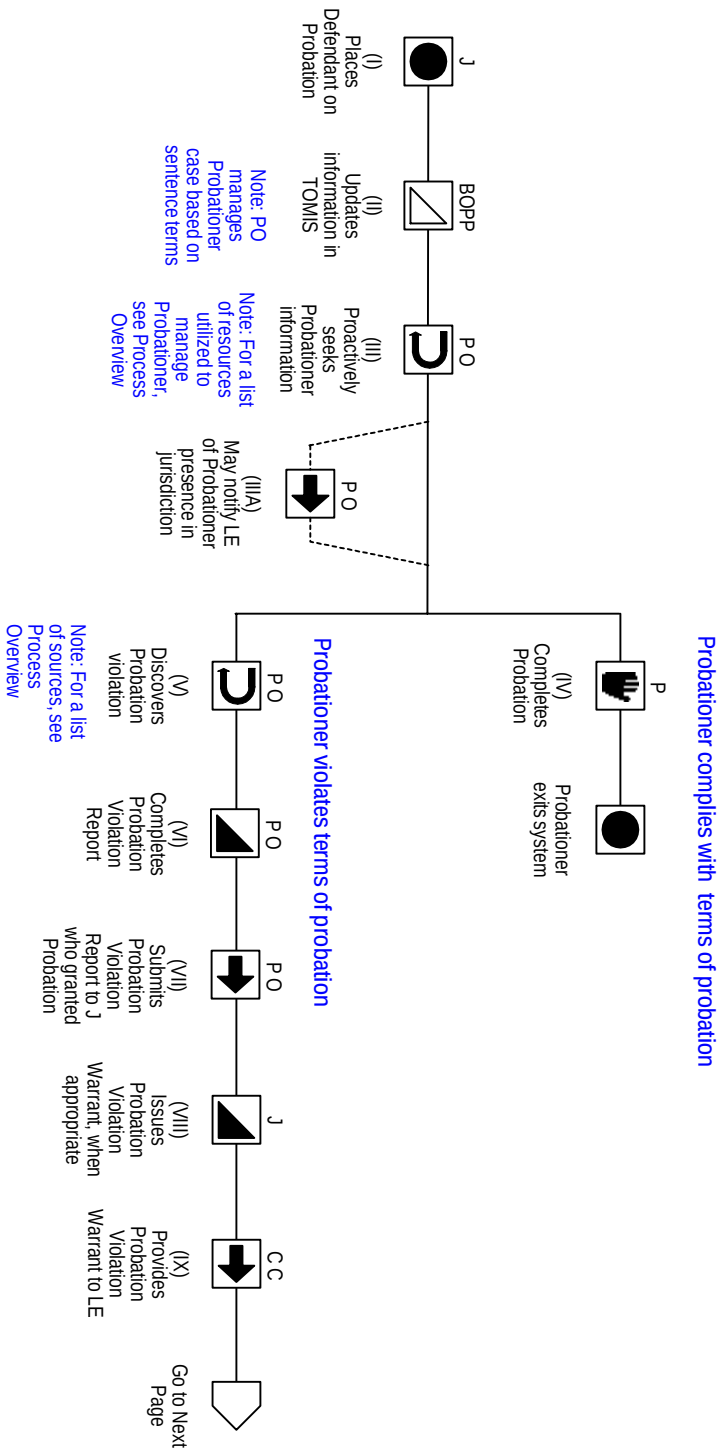

"As-Is" Model: Probation (Page 2 of 2)

Probation: Process Overview

When a Defendant is sentenced to Probation, he is subject to specific conditions and the supervision of a Probation Officer in lieu of incarceration unless he is sentenced to Unsupervised Probation. Unsupervised Probation is ordered on the Case Judgment Document and does get processed by Probation Officers but no routine contact or supervision is maintained. Probation Officers supervise and investigate the conduct, behavior and progress of those on supervised Probation (i.e., Probationers). If a Probationer violates the terms of Probation, he may be ordered by the Judge to serve the remainder of the term in jail or prison.

If the Defendant is sentenced to Private Probation to be supervised through a private company, the Case Judgment Document is typically not signed or completed indicating such. The Board of Probation and Parole has no information exchange or supervision responsibilities and in most cases, no knowledge that Private Probation was imposed.

Key information exchanges associated with the **Probation** process are described below.

I. Judge Places Defendant on Probation

At a Sentencing Hearing, the judge may place the defendant on Probation with specific terms.

Probation Officers routinely attend these hearings to obtain information about individuals who are placed on Probation.

II. Board of Probation and Parole Updates Information in TOMIS

Probation and Parole uses Tennessee Offender Management Information System (TOMIS) to update information about and track Probationers. Typically, Defendant information is entered in TOMIS during the Pre-Sentence Investigation. A new TOMIS ID is assigned unless the Defendant has been previously incarcerated and already has an existing TOMIS ID. The Probation Office manages the Probationer case based on the terms of the sentence.

III. Probation Officer Proactively Seeks Probationer Information

The Probation Officer gathers information about and manages a Probationer by:

- Reviewing existing information within TOMIS
- Reviewing records within a Court Clerk Office's Court Information System and paper case files
- Reviewing records within a Law Enforcement Agency's Records Management System and paper case files
- Reviewing records within a District Attorney Office's Records Management System and paper case files
- Querying NCIC
- Querying Tennessee's Criminal History Repository
- Interviewing family members
- Interviewing employers
- Obtaining information from the Department of Human Services
- Obtaining information from Department of Correction institutions where the Probationer was previously incarcerated

A. PROBATION OFFICER MAY NOTIFY LAW ENFORCEMENT OF PROBATIONER PRESENCE IN JURISDICTION

IV. Probationer Completes Probation

When a Probationer stays in compliance and completes the Probation terms, he exits the system.

V. Probation Officer Discovers Probation Violation

The Probation Officer may discover a probation violation from a variety of sources:

- A Probation Officer may query TOMIS to verify a Probationer's status by checking the system for Criminal History, Case Management Violations or other data
- A member of the community reports a problem
- A Law Enforcement Officer reports a problem
- A Probation Officer may read or hear about a Probationer's problem via the media (TV/Newspaper)
- A query of the Court Clerk's Office Court Information System
- A Probation Officer may observe a Probationer's name on a New Arrests Report provided by the Court Clerk's Office. Court Clerk's Offices periodically create reports listing all new arrests within a jurisdiction during a specified period of time. The New Arrests Reports are periodically distributed to Probation and Parole Offices.

VI. Probation Officer Completes Probation Violation Report

When the Probation Officer discovers that a Probation violation has occurred, he completes a Probation Violation Report.

VII. Probation Officer Submits Probation Violation Report to Judge who granted Probation

The completed Probation Violation Report is submitted, when possible, to the Judge who originally granted Probation.

VIII. Judge Issues Probation Violation Warrant, when appropriate

The Judge reviews the Probation Violation Report and if the violation or offense is severe enough, issues a Probation Violation Warrant.

IX. Court Clerk's Office Provides Probation Violation Warrant to Law Enforcement

The Court Clerk's Office will give the Probation Violation Warrant to the Law Enforcement Agency that serves warrants.

X. Law Enforcement Arrest Probationer

The Law Enforcement Agency that serves warrants will seek the Probationer and make an arrest.

XI. Probation Officer Requests Arrest Report or Affidavit of Complaint from Law Enforcement or Court Clerk's Office

Upon being notified of a Probationer's arrest, a Probation Officer requests a copy of the applicable Arrest Report and/or Affidavit of Complaint from the arresting Law Enforcement Agency or the Court Clerk's Office.

XII. Court Clerk's Office Notifies Probation Officer and Probationer to appear in court

The Court Clerk's Office will notify the Probation Officer and the Probationer when to appear in court for a hearing.

XIII. Judge Holds Hearing and Informs Probationer of Specific Violation

During the hearing (or within 72 hours of the arrest), the Probationer will be informed (verbally and in writing) of the alleged Probation violation. Evidence will be presented at the hearing and witnesses may testify. The Judge decides whether to Revoke Probation or not. If the Judge does not revoke Probation, he can alter the conditions of Probation.

When possible, the hearing is held before the Judge whom sentenced the Probationer.

XIV. Probation is Revoked, Probationer is Incarcerated

When Probation is revoked, the Judge issues a court order that Probation is revoked. The Probationer or Public Defender may ask the Judge for alternative penalties to placement in jail or prison. Otherwise, the Probationer is sent to jail or prison.

Note: When **Probation not revoked**, the Probationer continues on Probation, with or without a change in the terms of Probation. Go back to **IV. Probationer Completes Probation**.

XV. Court Clerk's Office, District Attorney, Public Defender and Board of Probation and Parole Update Respective Court Information System, Records Management System, Tennessee Offender Management Information System and Paper Files

The Court Clerk's Office, District Attorney's Office, Public Defender's Office and Probation Office make records of the outcome of Probation violation and the hearing within their respective systems and paper case files.

Probation: Agency Roles & Responsibilities

Agencies involved in the **Probation** process and their primary information exchange responsibilities are listed below.

Board of Probation & Parole

- Keeps a record of each Probationer's case.
- Obtains Probationer background information from Court Clerk's Offices, the Department of Correction, the Department of Human Services, District Attorney's Offices, and/or Law Enforcement Agencies.
- Notifies Law Enforcement Agencies about new Probationers within their jurisdiction.
- Collects and processes listings of new arrests received from the Court Clerk's Office.
- Obtains Affidavits of Complaint and/or Incident/Offense Reports from the Court Clerk's Office or Law Enforcement Agency when a Probationer has been arrested.
- Submits Probation Violation Reports to the District Attorney's Office or the Court Clerk's Office.
- Collects and processes copies of Probation Revocation Orders received from the Court Clerk's Office.

Court Clerk's Office

- Provides background information about a Probationer to the Board of Probation & Parole.
- Compiles and distributes a listing of new arrests to the Board of Probation & Parole.
- Provides a copy of an Affidavit of Complaint forms and/or Incident/Offense Report to a Board of Probation & Parole (upon request).
- Receives and processes Probation Violation Reports distributed by the Board of Probation & Parole.
- Keeps records of Probation Violation Reports received from the Board of Probation & Parole.
- Distributes Probation Violation Reports to the appropriate Judge for review.
- Keeps records of Probation Violation Arrest Warrants issued by Judges.
- Distributes Probation Violation Arrest Warrants to the appropriated Law Enforcement Agencies for service/execution.
- Processes and completes Probation Revocation Order documentation.
- Distributes copies of Probation Revocation Orders to the Board of Probation & Parole and District Attorney's Offices.
- Keeps records of Probation Revocation Orders issued by Judges.

Department of Correction

- Provides Probationer background information to the Board of Probation & Parole.

Department of Human Services

- Provides Probationer background information to the Board of Probation & Parole.

District Attorney's Office

- Provides Probationer background information to the Board of Probation & Parole.
- Keeps records of Probation Violation Reports received from the Board of Probation & Parole.
- Submits Probation Violation Reports to the Court Clerk's Office (when appropriate).
- Receives and processes copies of Probation Revocation Orders sent by the Court Clerk's Office.

Judge

- Reviews Probation Violation reports.
- Issues Probation Violation Arrest Warrants.
- Administers Probation Violation and Probation Revocation Hearings.
- Issues Probation Revocation Orders.

Law Enforcement Agency

- Provides Probationer background information to the Board of Probation & Parole.
- Obtains information from the Board of Probation & Parole regarding new Probationers within the Law Enforcement Agency's jurisdiction.
- Provides copies of Affidavits of Complaint and/or Incident/Offense Reports to the Board of Probation & Parole (upon request).
- Receives and processes Probation Violation Arrest Warrants sent by the Court Clerk's Office.
- Serves Probation Violation Arrest Warrants.

Tennessee Bureau of Investigation

- Provides Probationer background information to the Board of Probation & Parole.

Probation: Information Exchange

The Events that generate inter-agency Information Exchange within the **Probation** process are shown in the table below.

Information Exchange during the Probation Process

ID	EVENT	INFORMATION EXCHANGED	SEND AGENCY	RECEIVE AGENCY	METHOD	FREQ
	A Probationer's background information is obtained from a continuous exchange of data with the Department of Correction.	Basic ID Data Case ID Data Custody Data Enhanced ID Data Disposition Data Medical Data Mug Shot Data Name Data Offense Data Personal ID Data Sentence Data	TDOC BOPP	BOPP TDOC	Paper: Custody records Paper: Medical records Electronic: Various data and records within TOMIS and other sources.	MED
	A Probationer's background information is obtained from a Court Clerk's Office.	Arrest Data Basic ID Data Case ID Data Contact Data Disposition Data Name Data Offense Data Payment Data Personal ID Data Sentence Data	Court Clerk	BOPP	Paper: Various records from the Court Clerk Office's case file(s).	MED
	A Probationer's background information is obtained from a LEA.	Arrest Data Basic ID Data Case ID Data Charge Data Disposition Data Enhanced ID Data Name Data Offense Data Personal ID Data	LEA	BOPP	Paper: Various records from the LEA's case file(s).	LOW
	A Probationer's background information is obtained from a Dist. Attorney's Office.	Basic ID Data Case ID Data Charge Data Disposition Data Name Data Offense Data Sentence Data	District Attorney	BOPP	Paper: Various records from the District Attorney's case file(s).	LOW

ID	EVENT	INFORMATION EXCHANGED	SEND AGENCY	RECEIVE AGENCY	METHOD	FREQ
	A Probationer's background information is obtained from the TBI.	Arrest Data Basic ID Data Case ID Data Charge Data Disposition Data Name Data Offense Data Personal ID Data	TBI	BOPP	Electronic: Tennessee Criminal History Repository	LOW
	A Probationer's background information is obtained from the Department of Human Services.	Basic ID Data Medical Data Name Data Social ID Data	DHS	BOPP	Paper: Forms, Reports, etc. *and/or* Electronic: DHS Records Management System	LOW
	A LEA is notified of the presence of a Probationer within their jurisdiction.	Address Data Basic ID Data Disposition Data Mug Shot Data Name Data Probation Data	BOPP	LEA	Paper: Notification Report	MED
	A Court Clerk's Office provides a listing of new arrests to a probation office.	Arrest Data Basic ID Data Booking Data Just. Official ID Data Name Data Offense Data Schedule Data	Court Clerk	BOPP	Paper: New Arrest Report *or* Electronic: Court Clerk's Office Criminal Information System	HIGH
	A Probationer is arrested.	Arrest Data Basic ID Data Case ID Data Charge Data Contact Data Enhanced ID Data Just. Official ID Data Name Data Offense Data	Court Clerk *and/or* LEA	BOPP	Paper: Affidavit of Complaint *and/or* Paper: Incident/Offense Report	MED

ID	EVENT	INFORMATION EXCHANGED	SEND AGENCY	RECEIVE AGENCY	METHOD	FREQ
	A Probation Violation Report is filed.	Arrest Data Basic ID Data Case ID Data Charge Data Just. Official ID Data Name Data Offense Data Violation Data	BOPP	District Attorney *or* Court Clerk	Paper: Probation Violation Report	MED
	A Probation Violation Warrant is issued.	Address Data Basic ID Data Charge Data Contact Data Enhanced ID Data Just. Official ID Data Name Data Offense Data Warrant Data Violation Data	Court Clerk	LEA	Paper: Probation Violation Warrant	MED
	Probation is revoked.	Basic ID Data Case ID Data Just. Official ID Data Name Data Probation Data Sentence Data Violation Data	Court Clerk	BOPP District Attorney	Paper: Order to revoke probation	MED

Probation: Data Elements

The data elements listed below are exchanged between multiple criminal justice agencies and are essential to the **Probation** process. See APPENDIX B: DATA ELEMENTS for more details.

ADDR	**Address Data**
ARRS	**Arrest Data**
BASC	**Basic Identification Data**
BOOK	**Booking Data**
CASE	**Case Identification Data**
CHRG	**Charge Data**
CONT	**Contact Data**
CUST	**Custody Data**
DISP	**Disposition Data**
IDEN	**Enhanced Identification Data**
JUST	**Justice Official Identification Data**
MEDI	**Medical Data**
PHOT	**Mug Shot Data**
NAME	**Name Data**
OFFN	**Offense Data**
PAYM	**Payment Data**
PERS	**Personal Identification Data**
PROB	**Probation Data**
SCHD	**Schedule Data**
SENT	**Sentence Data**
SOCI	**Social Identification Data**
VIOL	**Violation Data**
WARR	**Warrant Data**

Probation: Technology

The table below details the primary computer systems and databases used in exchange of information during the **Probation** process. See Appendix D for more detailed information about computer systems and applications.

Probation – Technology

NAME	DESCRIPTION
Case Management System (CMS)	A case management system is used to manage the proceedings of a court case. Attorneys from the District Attorney's Office and the Public Defender's Office often use it. Maintained by: District Attorney's Office, Public Defender's Office
Court Information System (CIS)	A court information system is used to manage the daily affairs of the court clerk's office. It contains functionality for Case History, Master Person File, Bill-of-Cost, Case Disposition Rule & Execution, and Reporting System and generates a docket number. Maintained by: Court Clerk's Office
National Crime Intelligence Center (NCIC)	A computerized network that connects Law Enforcement Agencies throughout the United States and contains information about crimes that have occurred throughout the country. Criminal History and/or Arrest Warrant status information is commonly requested from NCIC. Maintained by: Federal Bureau of Investigation (FBI)
Records Management System (RMS)	A computer system that captures and stores information about a case and promotes an agency's ability to manage its records. Maintained by: Law Enforcement Agency, District Attorney's Office, Public Defender's Office
Tennessee Criminal History Repository (TCHR)	The Tennessee Criminal History Repository (TCHR) contains information about arrests, charges, and final dispositions of individuals who have committed offenses in Tennessee. Maintained by: Tennessee Bureau of Investigation (TBI)
Tennessee Offender Management Information System (TOMIS)	The computer system used by the Department of Correction and Board of Probation Parole to store and process information about sentencing, incarceration, release, Probation and Parole. The system tracks all activities of inmates, probationers and parolees. The Tennessee Department of Correction has recently implemented an Internet-based version of the software. Maintained by: Tennessee Department of Correction, Board of Probation and Parole

Probation: Forms

ID	FORM NAME	FORM DESCRIPTION
F-15	Probation Monthly Reporting Form	This form is completed by the Probation and Parole Officer for each Probationer that is being managed within caseload.
F-16	MITTIMUS	This form is completed by a Judge and serves as the Warrant for a violation of probation.
F-17	Probation Violation Report	The Probation and Parole Officer for a Probationer who has been arrested and has violated the terms of Probation completes this form. The form is submitted to the District Attorney's Office for decision whether to request a Probation Revocation Hearing.
F-18	BOPP TOMIS Transactions	This form is completed by Probation and Parole and is used to collect Probationer or Parolee information for entry into TOMIS.

Probation Monthly Reporting Form

State of Tennessee
BOARD OF PROBATION AND PAROLE
FIELD SERVICES DIVISION

MONTHLY REPORTING FORM

OFFICER NAME: _____ **DATE:** _____

OFFENDER NAME: _____ **TOMIS #:** _____

OFFENDER ADDRESS: _____ **HOME PHONE NUMBER:** ( )
NUMBER STREET APT NUMBER

_____
CITY COUNTY State ZIP

EMPLOYER: _____ **PHONE NUMBER:** ( )

ADDRESS: _____
NUMBER STREET CITY COUNTY STATE ZIP

SUPERVISOR: _____ **NUMBER OF DAYS WORKED:** _____ **SALARY:** _____

TIME NOW REPORTING: _____ a.m. p.m. **AMOUNT OF OTHER INCOME:** _____ **SOURCE OF OTHER INCOME:** _____

NUMBER OF COMMUNITY SERVICE HRS WORKED: _____ **WERE YOU ARRESTED OR QUESTIONED BY THE POLICE SINCE YOU LAST REPORTED?** **NO** ☐ **YES** ☐ **[IF YES EXPLAIN BELOW]**

_____

_____

_____

_____ **OFFENDER DRIVER'S LICENSE NUMBER:** _____
[IDENTIFY VEHICLE OFFENDER TRAVELS IN]
MAKE: **MODEL/ YEAR:** **COLOR:** **TAG NUMBER:**

I AM FAMILIAR WITH ALL THE CONDITIONS OF MY SUPERVISION AND, EXCEPT WHERE NOTED ABOVE, HAVE FULLY COMPLIED WITH THEM.

OFFENDER SIGNATURE: _____ **DATE:** _____

RECEIVED BY: _____ **DATE:** _____

DO NOT WRITE BELOW THIS LINE — TO BE COMPLETED BY OFFICER

Officer Comments

_____	VERIFIED ID CARD	_____	BROUGHT EMPLOYMENT VERIFICATION (OOEC)
_____	NO PROBLEMS OR CHANGES	_____	BROUGHT SUBS ABUSE TRT/SC VERIFICATION
_____	COMPLETED TREATMENT: _____	_____	WARNED ABOUT FEES (OOFC)
_____	TOLD TO BRING SUBS ABUSE TRT/SC	_____	NEXT REPORT: _____
_____	COMPLETED SEX OFFENDER REGISTRATION	_____	TOLD TO DO FELONY REGISTRATION
_____	ISSUED TRAVEL PERMIT (ATDI)	_____	DRUG SCREEN (OOUC) -RESULT:
_____	RETURNED TRAVEL PERMIT	_____	ATTENDED ADJUSTMENT COUNSELING
_____	BROUGHT IN COURT COST RECEIPT	_____	REFERRED TO ADJUSTMENT COUNSELING
_____	WORK PROJECT HOURS VERIFICATION	_____	OTHER: _____
_____	RESTITUTION PAYMENT VERIFICATION	_____	OTHER: _____

Notes: _____

_____

_____

_____

[over for continued notes]

BP0009 (REV 3/2000) Page 1 of 2 RDA1664

Probation Monthly Reporting Form (Continued)

CONTACT CODES: _____ DATE: _____ TIME: _____

COMMENTS: _____

ENTERED BY: _____

CONTACT CODES: _____ DATE: _____ TIME: _____

COMMENTS: _____

ENTERED BY: _____

CONTACT CODES: _____ DATE: _____ TIME: _____

COMMENTS: _____

ENTERED BY: _____

CONTACT CODES: _____ DATE: _____ TIME: _____

COMMENTS: _____

ENTERED BY: _____

CONTACT CODES: _____ DATE: _____ TIME: _____

COMMENTS: _____

ENTERED BY: _____

CONTACT CODES: _____ DATE: _____ TIME: _____

COMMENTS: _____

ENTERED BY: _____

BP-0009 (REV 3/2000) Page 2 of 2 RDA-1684

MITTIMUS

_____Court _____ County _____ Tennessee	**MITTIMUS** Page 1 of 1	**Case Number**
_____vs. _____		

❑ **ON ARREST:** The Defendant having been arrested and brought before me on the offense of _____ _____and Defendant having failed to give bail as required, YOU ARE COMMANDED to receive the Defendant into custody and detain him/her to appear in General Sessions Court of said county on _____at _____. Bond is set at _____.

❑ **ON CONVICTION:** The Defendant having been convicted of the offense herein on _____and ordered to pay a fine and/or restitution of $_____, and cost of suit totaling $_____, and sentenced to serve _____ in the county jail: IT IS THEREFORE ORDERED that the Defendant be confined in the _____ County jail (workhouse) until legally discharged. If not paid 45 days from date of judgment, amount due is $_____.

❑ **FOR VIOLATION OF PROBATION:** The Court having found that the Defendant has violated the condition of the suspended sentence/probation and ordered to serve _____ months _____ days in the _____ County jail: IT IS THEREFORE ORDERED that the Defendant be confined in said County jail (workhouse) until legally discharged.

❑ **FOR BIND OVER TO GRAND JURY:** It having been found by the General Sessions Court of said County that there is probable cause that the Defendant committed the offense set forth: YOU ARE COMMANDED to hold the Defendant to answer said charge in the General Sessions/Criminal Court of said county on _____ at _____ or at the next term of the General Sessions/Criminal Court of said County. Bond is hereby set at $_____.

❑ **FOR CONTEMPT:** The Defendant having been convicted of the offense herein and was ordered to pay a fine of $_____, and cost of suit, and he/she having failed to pay the same as required by law, IT IS THEREFORE ORDERED that he/she be confined in the county jail (workhouse) until said fines/costs are paid/secured/worked out (or proper pauper oath taken) according to law. You are, THEREFORE, COMMANDED to receive the Defendant into said jail until legally discharged, but not to exceed _____ days. Defendant may be released upon a cash bond of $_____.

❑ **OTHER:** _____
_____
_____
_____

Date:_____ Judge/Clerk/Deputy Clerk:_____

Probation Violation Report

TENNESSEE DEPARTMENT OF CORRECTION
DIVISION OF COMMUNITY SERVICES

PROBATION VIOLATION REPORT

DATE: _____

TO: The Honorable _____

FROM: _____ Probation Officer

Probationer: _____ **DOB** _____ **TOMIS I.D.** _____

Docket Number: _____ **Court:** _____

Sentence: _____ **Date of Probation:** _____

Length of Probation: _____ **Offense:** _____

Type of Violation: **New Arrest** _____ **New Conviction** _____ **Absconding** _____
Technical _____ **Follow-up** _____

Arrest Data: Date _____ **Offense(s)** _____

Disposition: _____

Court: _____ **On Bond:** _____

Probationer's Current Address: _____

In Custody _____ **Institution:** _____

Absconding Data: Last Known Address: _____

Date Moved Without Permission: _____

How Violation Occurred: (Identify Specific Rule Violation on Back:

Submitted By: _____

Approved By: _____

Probation Violation Report (Continued)

PROBATION RULE VIOLATION

_____ 1. I will obey the laws of the United States as well as any municipal ordinances.

_____ 2. I will report all arrest(s), including traffic violations, immediately, regardless of the outcome, to my Probation Officer.

_____ 3. If convicted of a felony, I will not receive, own, possess, ship, or transport any firearms, ammunition, or illegal weapon. Reference Gun Control of 1968. Public Law 90-618, Title 1, Section 922 entitled "Unlawful Acts". All other probationers require express permission of the Court for use of firearms.

_____ 4. I will work at a lawful occupation and support my dependents, if any, to the best of my ability.

_____ 5. I will inform my probation officer before changing my residence or employment. I will get the permission of my Probation Officer before leaving the State.

_____ 6. I will allow my Probation Officer to visit my home; employment site, or elsewhere, and will carry out all instructions he/she gives, and report to my Probation Officer as instructed.

_____ 7. I will not use intoxicants (beer, whiskey, wine, etc.) of any kind, to excess, or use or have in my possession narcotic drugs or marijuana. I will submit to drug screens as directed.

_____ 8. I will not enter an establishment whose prime purpose is to sell alcoholic beverages (bars, taverns, clubs, etc.).

_____ 9. I will agree to pay all required fees to the Supervision and Criminal Injuries fund unless waived by appropriate authorities.

_____ 10. I will observe any special conditions imposed by the Court as listed below:

_____

_____

_____

HOW VIOLATION OCCURRED

_____

_____

_____

_____

_____

_____

_____

Board Of Probation and Parole TOMIS Transactions

STATE OF TENNESSEE
BOARD OF PROBATION AND PAROLE
FIELD SERVICES DIVISION

TOMIS TRANSACTIONS

☐ PROBATION ☐ PAROLE

OFFICER NAME: OFFICER STAFF ID:

OFFENDER INFORMATION:
LAST NAME: _____ FIRST NAME: _____ MI: _____
TOMIS#: _____ DOB: _____ SSN:
SEX: ___ RACE: _____ EYES: _____ HAIR: _____ HGT: _____ WGT: _____
CURRENT ADDRESS:

TRANSFER:
Reassign from Officer _____ to _____ as Case Type: _____
LCD3 Effective Date:

LIMD: ☐ See reverse side ☐ LCDU ☐ LCDF Effective Date:

NEW CASE INFORMATION: Offense: _____

Check when completed:

☐ LIMD: See reverse side.
☐ LCD3: Assignment Type: ☐ PROB = Probation) ☐ PAO = Parole
Assigned from or Plan Start Date: _____ Expiration Date: _____
Sentence Type: ☐ PPO ☐ TNP ☐ DET ☐ DIV* ☐ SAI ☐ ISC*
* Additional information to be added below.
☐ LCDU: ☐ $30 CIC ☐ $15 SPR ☐ $15 SPA ☐ $15 ISC ☐ $ ____ 313 ☐ $____ DIV
☐ LCDF: Level of Supervision: ☐ ENH ☐ XEN ☐ MAX ☐ XMX ☐ MED ☐ XMD ☐ MIN ☐ ISC
☐ ABS ☐ DET ☐ ICU ☐ RPT ☐ WRT ☐ MSD ☐ SDS (Parole Only)
☐ JSS (Probation Only) ☐ WRB (Probation Only)

DIVERSION CASES: LSTT
County of Conviction #: _____ Case Year: _____ Case #: _____ Count #: _____
Sentence Type: ☐ D = Judicial-313 ☐ P = Pretrial Status: ☐ O = Open ☐ C = Closed
Date Granted: _____ Offense Code(s): _____
Expiration Date: Date Judge Closed:

ISC INFORMATION: LSTP
Sentence Type: ☐ B = Probation ☐ P = Parole ISC State: _____ Sending State #: _____
Count #: _____ Indictment #: _____ Conviction Offense Code: _____
Sentence: _____ Sentence Imposition Date: _____ Offense Date: _____
Exp. Date: _____ Case Year: _____
Disposition: _____ PG = Pled Guilty, NC = Nolo Contendre, GJ = Guilty-Bench Trial

CASE CLOSURES:
☐ TEPE (By Officer)
☐ LCDU: Case or Fee End Date: _____ End Reason: ☐ EXP ☐ DIS ☐ REV ☐ RVC ☐ RVD ☐ RVT ☐ RVP ☐ DEA (A=Accidental, M=Murder, N=Natural, S=Suicide, I = Illness)
☐ LIMD See Page 2
☐ LCD3

Board Of Probation and Parole TOMIS Transactions (Continued)

PAROLE MOVE TYPE:	MOVE REASON:	FROM:	TO:
☐ Other Jurisdiction to Parole (OJPA)	☐ ISC (Case coming from other state)		
☐ Parole to Other Jurisdiction (PADI) DISCHARGE	☐ ISC—Close Interest (CLINT)		
☐ Parole to Parole transfer (PAPA)	☐ Internal (INTER)		
☐ Parole to Abscond (PAAB)	☐ Abscond (ABSPA)		
PROBATION MOVE TYPE:	**MOVE REASON:**	**FROM:**	**TO:**
☐ Court to Diversion (CTDV)	☐ Court Order (COURT)		
☐ Other Jurisdiction to Prob (OJPR)	☐ ISC – (Case coming from other state)		
☐ Prob to Other Jurisdiction (PROJ) TRANSFER	☐ ISC – (TN case going to other state)		
☐ Probation to Facility (PRFA)	☐ Probation Revoked (PRVOK) ☐ Violation – Technical (VIOLT) ☐ Violation – New Charge (VIOLW) ☐ New Charges (NEWCH) ☐ Split Confinement (SPLIT)		
☐ Diversion to Discharge (DVDI)	☐ Court Order (COURT)		
☐ Probation to Abscond (PRAB)	☐ Failure to Report (FAILR)		
☐ Probation to Probation (PRPR)	☐ Internal Transfer (INTER)		

Completed By: _____ (Signature) _____ (Title) Date: _____

Approved By: _____ (Signature) _____ (Title) Date: _____

Entered By: _____ (Signature) _____ (Title) Date: _____

Probation: Opportunities for Improvement

The "Opportunities for Improvement" section provides a general list of observations compiled during the ICJ project interview phase. These ideas will be considerations for the development of the "To-Be" Model regarding the **Probation** process.

AUTOMATED DAILY ARREST REPORT SEARCH - Currently Probation and Parole Officers have to read through daily arrest reports that are generated by the Court Clerk's Office to search for Probationers and Parolees. An automated computer program that would search the Arrest Report and automatically find Probationers and Parolees would be beneficial to Probation and Parole. This would be a great fit for an event scout on the Portal web page. Authorized users of the web Portal could set up their own criteria for searches including when the automatic searches could be run (daily, weekly, monthly). This event scout could automatically email the results of the search to a user's or departmental email address.

TOMIS AND PRIVATE PROBATION – Currently, when a Defendant is sentenced to private probation, no Case Judgment Document is signed and thereby TOMIS does not get updated with the most updated information. Probation Officers also have no way to track status of Probationers since there is no information exchange between private probation companies and TOMIS.

CORRECTION

Correction: Process Diagram

"As-Is" Model: Correction

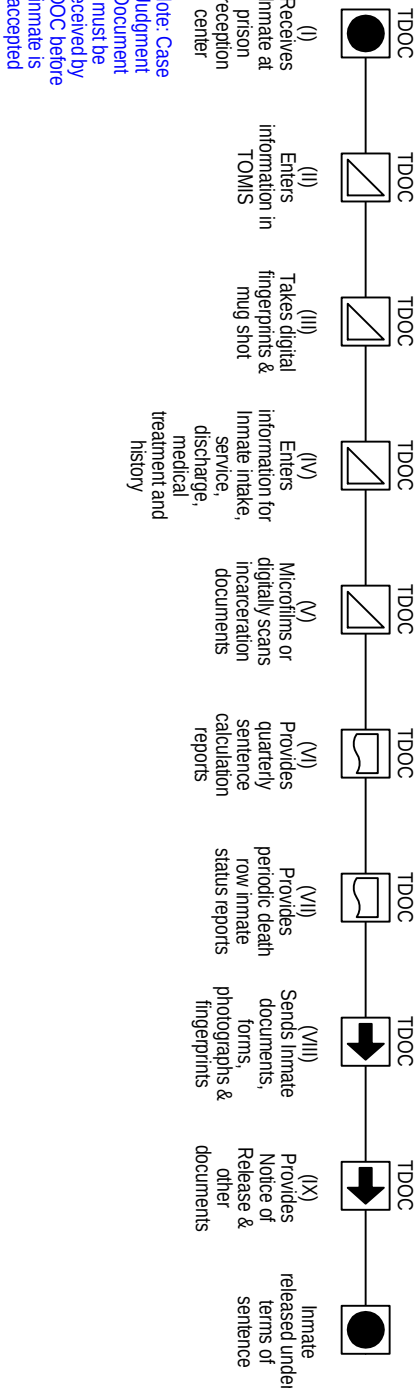

Correction: Process Overview

When an Offender's sentence involves incarceration, he may be confined at a County Jail, Workhouse or a State Prison. The Offender is committed to the custody of the Department of Correction as an Inmate and is sent to a Reception Center for evaluation and classification. Correction staff evaluates information (physical, psychological, educational, other) about the Inmate and recommends levels of supervision, custody and programs. The process of evaluation occurs continually throughout an Inmate's period of incarceration.

Throughout the incarceration period, an Inmate's activities are managed and recorded by the supervising agency. When an Offender is sentenced to less than one year of incarceration, his sentence will likely be served at a County Jail or Workhouse. When an Offender is sentenced to serve more than one year of incarceration, he will likely serve a significant portion of the sentence at a State Prison facility. Key information exchange events that occur during the **Correction** process are described below.

I. Tennessee Department of Correction Receives Inmate at Prison Reception Center

Upon a sentence of incarceration, the Court Clerk's Office sends a copy of the Case Judgment Document to the agency (Department of Correction or County Law Enforcement) that will have custody of the Offender. The Case Judgment Document must be received by TDOC before the inmate will be accepted at the prison reception center. The TDOC makes recommendations for supervision, custody and programs based on physical, psychological and educational evaluations of the inmate.

II. Tennessee Department of Correction Enters Information in Tennessee Offender Management Information System

The TDOC enters Offender information into Tennessee Offender Management Information System (TOMIS). If the Offender has previously been incarcerated and a TOMIS ID was assigned, that same ID should be used to enter this new information. Otherwise, the Detention Facility assigns a new TOMIS ID. The Offender's TOMIS record develops as information such as mug shots, scars, marks and tattoos of the Offender is entered during the subsequent processes.

When an Offender is transferred from a County Jail or Workhouse to a State Prison, the Law Enforcement Agency provides the Department of Correction with a report of the amount of time the Offender has served at the local facility prior to transfer to Department of Correction custody.

III. Tennessee Department of Correction Takes Digital Fingerprints and Mug Shot

When performing an intake of an Inmate into a state prison facility, the TDOC captures and stores a digital image of an Offender's fingerprints in its Print Track LLS 2000 LiveScan device. The Department of Correction also captures and stores a digital photograph of the Offender in its Kodak IBS System.

IV. Tennessee Department of Correction Enters Information for Inmate Intake, Service, Discharge, Medical Treatment and History

The TDOC maintains and stores records associated with an Offender's intake, service and discharge from a state prison facility. The TDOC also maintains and stores records of an Inmate's medical treatment and history.

V. Tennessee Department of Correction Microfilms or Digitally Scans Incarceration Documents

The TDOC microfilms and/or makes digital images of many documents and forms associated with an Offender's incarceration. Some of the information microfilmed and scanned includes institutional records, medical records, discharge records, case judgment documents, as well as information about conviction, disciplinary behavior and Parole eligibility. Once documents are filmed or digitally scanned, the hardcopies are destroyed. The digital images of the documents are stored on CDs and are managed using a system called FileNet.

VI. Tennessee Department of Correction Provides Quarterly Sentence Calculation Reports

The TDOC provides quarterly Sentence Calculation Reports to Prison Administrators, County Jails, Workhouses and made available to inmates.

VII. Tennessee Department of Correction Provides Periodic Death Row Inmate Status Reports

The TDOC provides periodic reports of death row Inmate status to the Governor's Office and requesting Public Defender's Offices.

VIII. Tennessee Department of Correction Sends Inmate Documents, Forms, Photographs & Fingerprints

Upon request, the TDOC sends copies of Inmate documents, forms, photographs and fingerprints to Probation and Parole Offices, Public Defender's Offices, District Attorney's Offices, Law Enforcement Agencies or Tennessee Bureau of Investigation. This information is typically sent through email or fax.

IX. Tennessee Department of Correction Provides Notice of Release & Other Documents

When an Inmate is released unconditionally, the TDOC completes and mails a Notice of Release form to the appropriate Judge, Victims, Witnesses, District Attorney's Office and Law Enforcement Agency.

When an Inmate is granted Parole, the TDOC provides the Board of Probation and Parole with copies of specified documents and forms related to the Inmate's incarceration. The TDOC also sends information about the Inmate's medical history to his assigned Parole Officer.

Correction: Agency Roles & Responsibilities

Agencies involved in the **Correction** process and their primary information exchange responsibilities are listed below.

Tennessee Department of Correction

- Receives and processes information related to an Inmate's local jurisdiction incarceration sent by Law Enforcement Agencies.
- Provides information about an Inmate's correction and/or incarceration to Law Enforcement Agencies, District Attorney's Offices and Public Defender's Offices (upon request).
- Provides Law Enforcement Agencies that maintain the custody of Inmates with Sentence Calculation Reports.
- Prepares Inmate's Notice of Release forms.
- Keeps records of an Inmate's release from correction.
- Sends copies of Notice of Release forms to applicable District Attorney's Offices, Judges and Law Enforcement Agencies.
- Collects and reports information about Death Row Inmates to the Governor's Office.

District Attorney's Office

- Receives and processes information related to an Inmate's correction/incarceration received from TDOC.
- Receives and processes Notice of Release forms obtained from the TDOC.

Judge

- Receives and reviews Notice of Release forms obtained from the TDOC.

Public Defender's Office

- Receives and processes information related to an Inmate's correction/incarceration received from the TDOC.

Law Enforcement Agency

- Provides information about an Inmate's incarceration in a County Jail or Workhouse to the TDOC.
- Requests and receives information related to an Inmate's correction/incarceration from the TDOC.
- Collects and processes Sentence Calculation Reports received from the TDOC.
- Collects and processes Notice of Release forms received from the TDOC.

Correction: Information Exchange

The Events that generate inter-agency Information Exchange within the **Correction** process are shown in the table below.

Information Exchange during the Correction Process

ID	EVENT	INFORMATION EXCHANGED	SEND AGENCY	RECEIVE AGENCY	METHOD	FREQ
	An Inmate is transferred from a local detention facility into the custody of the TDOC.	Basic ID Data Case ID Data Custody Data Enhanced ID Data Just. Official ID Data Medical Data Name Data Personal ID Data Release Data	LEA	TDOC	Paper: Custody History Paper: Medical History Paper: Time Served Report	HIGH
	Inmate information is obtained from TOMIS.	Basic ID Data Case ID Data Charge Data Custody Data Enhanced ID Data Just. Official ID Data Medical Data Name Data Personal ID Data Release Data	TDOC	District Attorney LEA	Electronic: TOMIS computer system	HIGH
	Various TDOC Inmate information and reports are distributed upon request.	Basic ID Data Case ID Data Custody Data Disposition Data Enhanced ID Data Fingerprint Data Just. Official ID Data Medical Data Name Data Parole Data Personal ID Data Probation Data Release Data Sentence Data Schedule Data Violation Data	TDOC	BOPP District Attorney Public Defender LEA TBI	Paper/Email: Custody History Paper: Fingerprint images Paper/Email: Medical History Paper/Email: Mug Shots	HIGH

ID	EVENT	INFORMATION EXCHANGED	SEND AGENCY	RECEIVE AGENCY	METHOD	FREQ
	Sentence Calculation reports are distributed.	Basic ID Data Case ID Data Custody Data Just. Official ID Data Name Data Personal ID Data Release Data Sentence Data	TDOC	LEA	Paper: Quarterly Sentence Calculation report	HIGH
	Death Row Inmate Status Reports are distributed.	Basic ID Data Case ID Data Custody Data Disposition Data Name Data Offense Data Personal ID Data Sentence Data	TDOC	Governor	Paper: Death Row Inmates Status report	LOW
	An Inmate is released.	Basic ID Data Case ID Data Custody Data Disposition Data Enhanced ID Data Just. Official ID Data Offense Data Parole Data Probation Data Release Data	TDOC	Judge District Attorney LEA	Paper: Notice of Release Form	HIGH

Correction: Data Elements

The data elements listed below are exchanged between multiple criminal justice agencies and are essential to the **Correction** process. See APPENDIX B: DATA ELEMENTS for more details.

BASC	**Basic Identification Data**
CASE	**Case Identification Data**
CHRG	**Charge Data**
CONT	**Contact Data**
CUST	**Custody Data**
DISP	**Disposition Data**
IDEN	**Enhanced Identification Data**
FING	**Fingerprint Data**
JUST	**Justice Official Identification Data**
MEDI	**Medical Data**
NAME	**Name Data**
OFFN	**Offense Data**
PARO	**Parole Data**
PERS	**Personal Identification Data**
PROB	**Probation Data**
RLSE	**Release Data**
SCHD	**Schedule Data**
SENT	**Sentence Data**
VIOL	**Violation Data**

Correction: Technology

The table below details the primary computer systems and databases used in exchange of information during the **Correction** process. See Appendix D for more detailed information about computer systems and applications.

Correction – Technology

NAME	DESCRIPTION
Tennessee Offender Management Information System (TOMIS)	The computer system used by the Department of Correction and Board of Probation Parole to store and process information about sentencing, incarceration, release, Probation and Parole. The system tracks all activities of inmates, probationers and parolees. The Tennessee Department of Correction has recently implemented an Internet-based version of the software. Maintained by: Tennessee Department of Correction, Board of Probation and Parole
Document Imaging and Management	A computer system that stores and manages digital images of documents. Maintained by: Tennessee Department of Correction
LiveScan	LiveScan is a computer system that digitally captures fingerprint images and information about the person being printed and then electronically transmits that data to a law enforcement repository for identification purposes. Maintained by: Federal Bureau of Investigations
Jail Management System	A custom software application that provides administrative functionality to manage county jails and correction centers. Maintained by: Tennessee Department of Correction

Correction: Forms

ID	FORM NAME	FORM DESCRIPTION
F-19	Case Judgment Document	The Judgment Sheet is generated by the District Attorney, and is completed by the court upon the final sentencing of the Defendant. The Case Judgment Document must be received by TDOC before an Inmate will be accepted at the prison reception center.

Case Judgment Document

IN THE CRIMINAL/CIRCUIT COURT OF _____COUNTY, TENNESSEE

Case Number: _____ Count # _____ Attorney for the State: _____

Judicial District: _____ Judicial Division: _____ Counsel for Defendant: _____

State of Tennessee ☐ Retained ☐ Appointed ☐ Public Defender

vs.

Defendant: _____ Alias: _____

Date of Birth: _____ Sex: _____ Race: _____ SSN: _____

Indictment Filing Date: _____ TDOC # _____ TBI Document Control # _____

JUDGMENT

Comes the District Attorney General for the State and the defendant with counsel of record for entry of judgment.

On the _____ day of _____, _____, the defendant:

☐ Pled Guilty ☐ Dismissed/Nolle Prosequi ☐ Nolo Contendere ☐ Retired/Unapprehended Defendant ☐ Guilty Plea – Pursuant to 40-35-313 Is found: ☐ Guilty ☐ Not Guilty ☐ Jury Verdict ☐ Not Guilty by Reason of Insanity ☐ Bench Trial	**Indictment:** Class (circle one) 1st A B C D E ☐ Felony ☐ Misdemeanor Offense: _____ Amended Charge: _____ Offense Date: _____ County: _____ Conviction Offense: _____ TCA #: _____ Sentence Imposed Date: _____ **Conviction:** Class (circle one) 1st A B C D E ☐ Felony ☐ Misdemeanor

After considering the evidence, the entire record, & all factors in T.C.A. Title 40 Chapter 35, all of which are incorporated by reference herein, the Court's findings & ruling

Sentence Reform Act of 1989			**Concurrent wit**	**Pretrial Jail Credit Period(s):**
Offender Status (Check One)	Release Eligibility (Check One)			From _____ to _____
☐ Mitigated	☐ Mitigated 20%	☐ Multiple Rapist 100%		From _____ to _____
☐ Standard	☐ Mitigated 30%	☐ Child Rapist 100%	**Consecutive to:**	
☐ Multiple	☐ Standard 30%	☐ Repeat Violent 100%		From _____ to _____
☐ Persistent	☐ Multiple 35%	☐ 1st Degree Murder		
☐ Career	☐ Persistent 45%	☐ School Zone		From _____ to _____
☐ Repeat Violent	☐ Career 60%	☐ Gang Related		
	☐ Violent 100%			

Sentenced To: ☐ TDOC ☐ County Jail ☐ Workhouse

Sentence Length: _____Years _____Months _____Days _____Hours _____Weekends ☐ Life ☐ Life w/out Parole ☐ Death

Mandatory Minimum Sentence Length: _____39-17-417, 39-13-513, 39-13-514 in School Zone *or* _____55-10-401 DUI 4th Offense

Period of incarceration to be served prior to release on probation: _____Months _____Days _____Hours _____Weekends

Minimum service prior to eligibility for work release, furlough, trusty status and rehabilitative programs: _____% (Misdemeanor Only)

Alternative Sentence: ☐ Probation ☐ Diversion ☐ Community Bas

_____Years _____Months _____Days Effective. _____

Court Ordered Fees and Fines:		**Restitution:** Victim Name _____
$ _____ Criminal Injuries Compensation Fund		Address _____
$ _____ Sex Offender Tax		_____
$ _____ Court Costs	**Cost to be Paid by**	Total Amount $_____ Per Month $_____
$ _____ Fine Assessed	☐ Defendant ☐ State	
$ _____ Other: _____		☐ Unpaid Community Service: _____Hours _____Days _____Weeks _____Months

☐ The Defendant having been found guilty is rendered infamous and ordered to provide a biological specimen for the purpose of DNA analysis.

Special Conditions ☐ Pursuant to 39-13-524 the defendant is sentenced to community supervision for life following sentence expiration.

_____ _____ _____

Judge's Name Judge's Signature Date of Entry of Judgment

_____ _____

Attorney for State/Signature (optional) Defendant's Attorney/Signature (optional)

CR-3419 (Rev. 3/03) White – Criminal Court Clerk Canary – TN Dept. of Correction/SMS Pink – AOC Goldenrod – Jail RDA 1167

Correction: Opportunities for Improvement

The "Opportunities for Improvement" section provides a general list of observations compiled during the ICJ project interview phase. These ideas will be considerations for the development of the "To-Be" Model regarding the **Correction** process.

AUTOMATED CASE JUDGMENT DOCUMENT - As mentioned in the Circuit or Criminal Court section, the Case Judgment Document is very important to multiple criminal justice agencies including the Department of Correction. An inmate is not received into the prison system without a completed Case Judgment Document that has been signed by the Judge. There are times when the timing of an inmate arriving at a prison and the documentation are out of sync. This could be corrected by automating the process.

MUG SHOTS - Provide Law Enforcement Agencies with online access to Department of Correction Mug shots.

DOUBLE TOMIS IDS ASSIGNED - When Probation Officers enter/update information in TOMIS, they should use the Offender's previously assigned TOMIS ID, but in many cases it is much easier to create a new record with a new TOMIS ID. This causes the issue of double TOMIS Ids existing for the same Offender. This ongoing problem needs to be addressed and a way of making updates to existing TOMIS Ids much easier for users.

PAROLE

Parole: Process Diagram

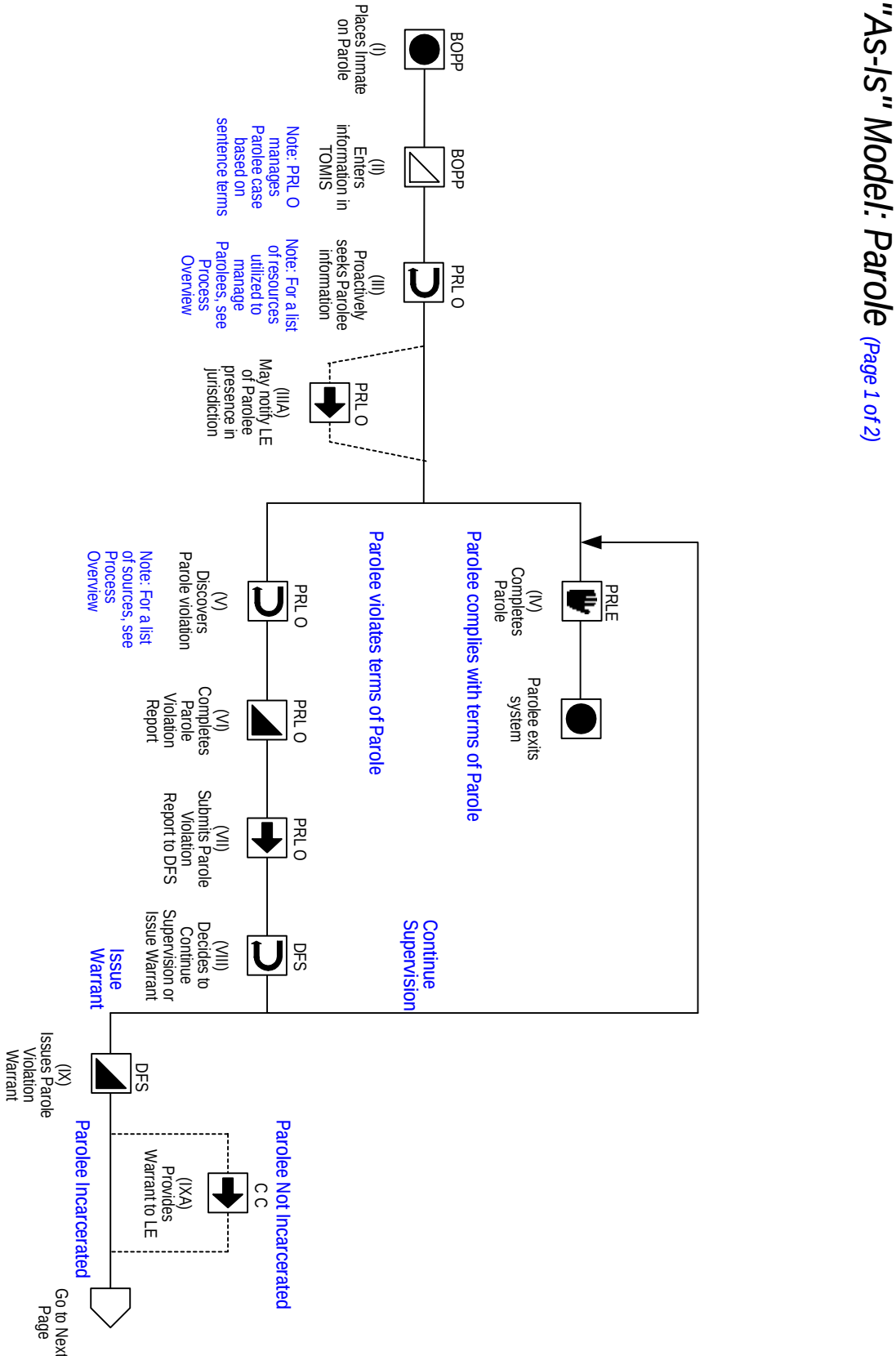

"As-Is" Model: Parole *(Page 2 of 2)*

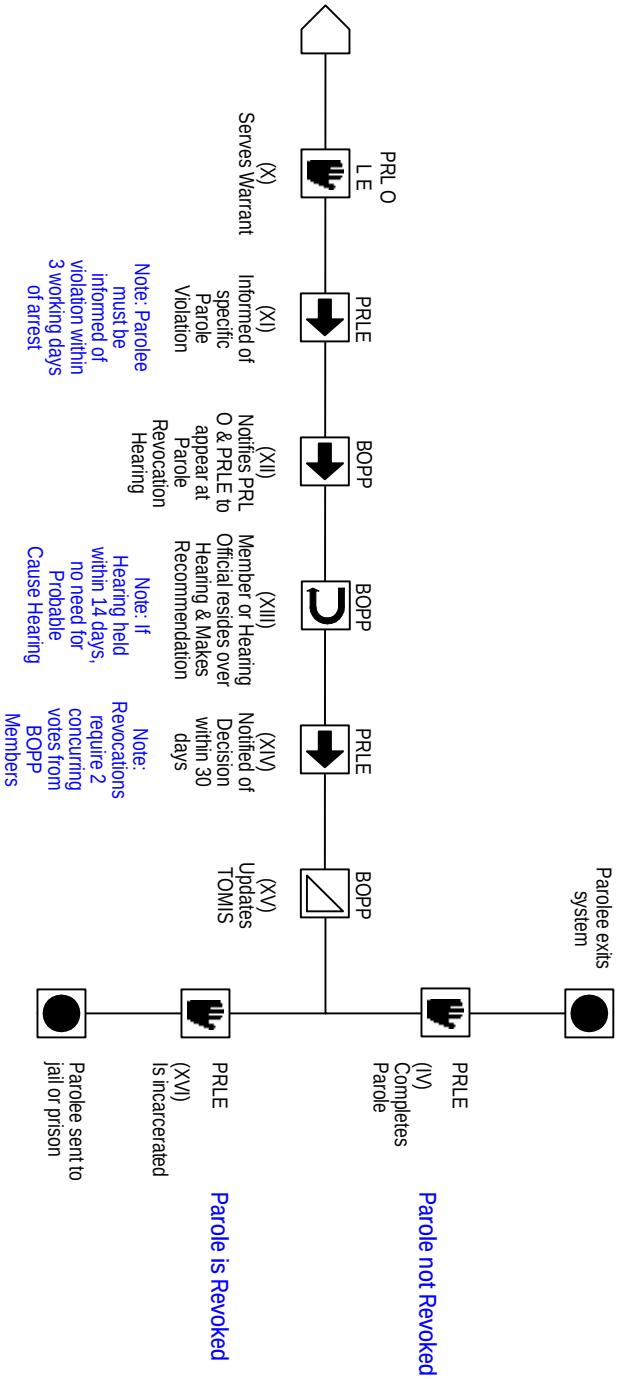

Parole: Process Overview

Parole allows an Inmate to be released from incarceration under certain conditions and restrictions. The Board of Probation and Parole (BOPP) determine if an Inmate will be granted Parole. Upon release, the Parolee is assigned a Parole Officer who will supervise and investigate his conduct, behavior and progress. Violation of the conditions of Parole is a potential cause for revocation or other sanctions.

Key information exchange events that occur during the **Parole** process are described below.

I. Board of Probation and Parole Places Inmate on Parole

At a Parole Hearing, the Board of Probation and Parole (BOPP) may place the Inmate on Parole with specific terms.

Parole Officers routinely attend these hearings to obtain information about individuals who are placed on Parole.

II. Board of Probation and Parole Enters Information in TOMIS

The BOPP uses Tennessee Offender Management Information System (TOMIS) to enter information about and track Parolees. If the Defendant is placed on Parole and does not currently have a TOMIS ID, he is assigned an ID upon the entry of the case into TOMIS. The Parole Office manages the Parolee case based on the terms of the sentence.

III. Parole Officer Proactively Seeks Parolee Information

The Parole Officer gathers information about and manages a Parolee by:

- Reviewing existing information within TOMIS
- Reviewing records within a Court Clerk Office's Court Information System and paper case files
- Reviewing records within a Law Enforcement Agency's Records Management System and paper case files
- Reviewing records within a District Attorney Office's Records Management System and paper case files
- Querying NCIC
- Querying Tennessee's Criminal History Repository
- Interviewing family members
- Interviewing employers
- Obtaining information from the Department of Human Services
- Obtaining information from Department of Correction institutions where the Parolee was previously incarcerated

A. PAROLE OFFICER MAY NOTIFY LAW ENFORCEMENT OF PAROLEE PRESENCE IN JURISDICTION

IV. Parolee Completes Parole

When a Parolee stays in compliance and completes the Parole terms, he exits the system.

V. Parole Officer Discovers Parole Violation

The Parole Officer may be notified of a Parole violation from a variety of sources:

- A member of the community reports a problem
- A Law Enforcement Officer reports a problem
- A Parole Officer reads or hears about a Parolee's problem via the media (TV/Newspaper)
- A query of the Court Clerk's Office Court Information System
- A Parole Officer observes a Parolee's name on a New Arrests Report provided by the Court Clerk's Office. Court Clerk's Offices periodically create reports listing all new arrests within a jurisdiction during a specified period of time. The New Arrests Reports are periodically distributed to Probation and Parole Offices.

VI. Parole Officer Completes Parole Violation Report

When a Parole Violation occurs the Parole Officer completes a Parole Violation Report.

VII. Parole Officer Submits Parole Violation Report to Director of Field Services

The completed Parole Violation Report is submitted to the Director of Field Services or their assistant.

VIII. Director of Field Services Decides to Continue Supervision or Issue Warrant

Director of Field Services or Assistant reviews the Parole Violation Report and decides whether to **Continue Supervision** or **Issue Warrant**. When a Warrant is issued, the next step depends on whether the **Parolee Incarcerated** or not.

Note: When the decision is to **Continue Supervision**, the Parolee continues on Parole, with or without a change in the terms of Parole. Go back to **IV. Parolee Completes Parole**.

IX. Director of Field Services Issues Parole Violation Warrant

When the Director of Field Services decides to issue a Warrant, it is filed with the Court Clerk's Office. If **Parolee Not Incarcerated**:

A. COURT CLERK'S OFFICE PROVIDES WARRANT TO LAW ENFORCEMENT

The Court Clerk's Office will give the Parole Violation Warrant to the Law Enforcement Agency that serves warrants.

X. Parole Officer or Law Enforcement Serves Warrant

If Parolee is already incarcerated, the Parole Officer may serve the Warrant to the Parolee; otherwise, the Law Enforcement Agency that serves warrants will seek the Parolee and make an arrest. Upon being notified of a Parolee's arrest, a Parole Officer requests a copy of the applicable Arrest Report and/or Affidavit of Complaint from the arresting Law Enforcement Agency or the Court Clerk's Office.

XI. Parolee Informed of Specific Parole Violation

The Parolee will be informed (verbally and in writing) of the alleged Parole Violation within 3 working days of arrest (or during the Parole Revocation Hearing).

XII. Board of Probation and Parole Notifies Parole Officer and Parolee to appear at Parole Revocation Hearing

When the Parolee is arrested on a Parole Violation Warrant, the Board of Probation and Parole will request a Parole Officer and the Parolee (via phone or mail) to appear at the Parole Revocation Hearing.

XIII. Board of Probation and Parole Member or Hearing Official resides over Hearing & Makes Recommendation

A member of the BOPP or Hearing Official resides over the Probation Revocation Hearing and makes a recommendation whether to revoke probation or not.

If this hearing is held within 14 days of arrest, there is no need for a Probable Cause Hearing.

XIV. Parolee Notified of Decision within 30 days

The Parolee is notified within 30 days of the BOPP decision to Revoke Parole.

Revocations require 2 concurring votes from BOPP members.

XV. Board of Probation and Parole Updates Tennessee Offender Management Information System

The Parole Office updates records of the outcome of the parole violation and Parole Revocation Hearing within TOMIS and paper case files.

XVI. Parole is Revoked, Parolee is Incarcerated

When Parole is revoked, the Parolee is sent to jail or prison.

Note: When **Parole is not revoked**, the Parolee continues on Parole, with or without a change in the terms of Parole. Go back to **IV. Parolee Completes Parole**.

Parole: Agency Roles & Responsibilities

Agencies involved in the **Parole** process and their primary information exchange responsibilities are listed below.

Board of Probation & Parole

Keeps a record of each Parolee's case.

Obtains Parolee background information from Court Clerk's Offices, the Department of Correction, the Department of Human Services, District Attorney's Offices, and/or Law Enforcement Agencies.

Notifies Law Enforcement Agencies about new Parolees within their jurisdiction.

Collects and processes listings of new arrests received from the Court Clerk's Office.

Obtains Affidavits of Complaint and/or Incident/Offense Reports from the Court Clerk's Office or Law Enforcement Agency when a Parolee has been arrested.

Manages information exchanges associated with Parole Violations.

Issues Parole Violation Arrest Warrants.

Administers Parole Violation and Parole Revocation Hearings.

Issues Parole Revocation Orders.

Processes and completes Parole Revocation Order documentation.

Distributes Parole Revocation Orders to Court Clerk's Offices.

Court Clerk's Office

Provides Parolee background information to the Board of Probation & Parole.

Distributes a listing of new arrests to the Board of Probation & Parole.

Provides a copy of an Affidavit of Complaint forms and/or Incident/Offense Report to the Board of Probation & Parole (upon request).

Keeps records of Parole Violation Reports received from the Board of Probation & Parole.

Collects and processes Parole Violation Arrest Warrants received from the Board of Probation and Parole.

Distributes Parole Violation Arrest Warrants to the appropriate Law Enforcement Agencies for service/execution.

Keeps records of Parole Revocation Orders issued by the Board of Probation and Parole.

Department of Correction

Provides Parolee background information to the Board of Probation & Parole.

Department of Human Services

Provides Parolee background information to the Board of Probation & Parole.

District Attorney's Office

Provides Parolee background information to the Board of Probation & Parole.

Law Enforcement Agency

Provides Parolee background information to the Board of Probation & Parole.

Obtains information from the Board of Probation & Parole regarding new Parolees within the Law Enforcement Agency's jurisdiction.

Provides copies of Affidavits of Complaint and/or Incident/Offense Reports to the Board of Probation & Parole (upon request).

Collects and processes Parole Violation Arrest Warrants received from the Court Clerk's Office.

Serves Parole Violation Arrest Warrants.

Tennessee Bureau of Investigation

Provides Parolee background information to the Board of Probation & Parole.

Parole: Information Exchange

The Events that generate inter-agency Information Exchange within the **Parole** process are shown in the table below.

Information Exchange during the Parole Process

ID	EVENT	INFORMATION EXCHANGED	SEND AGENCY	RECEIVE AGENCY	METHOD	FREQ
	A Parolee's background information is obtained from the Department of Correction.	Basic ID Data Case ID Data Custody Data Enhanced ID Data Disposition Data Medical Data Mug Shot Data Name Data Offense Data Personal ID Data Sentence Data	TDOC	BOPP	Paper: Custody records Paper: Medical records	HIGH
	A Parolee's background information is obtained from a Court Clerk's Office.	Arrest Data Basic ID Data Case ID Data Contact Data Disposition Data Name Data Offense Data Payment Data Personal ID Data Sentence Data	Court Clerk	BOPP	Paper: Various records from the Court Clerk Office's case file(s)	MED
	A Parolee's background information is obtained from a LEA.	Arrest Data Basic ID Data Case ID Data Charge Data Disposition Data Enhanced ID Data Name Data Offense Data Personal ID Data	LEA	BOPP	Paper: Various records from a LEA's case file(s).	LOW
	A Parolee's background information is obtained from a Dist. Attorney's Office.	Basic ID Data Case ID Data Charge Data Disposition Data Name Data Offense Data Sentence Data	District Attorney	BOPP	Paper: Various records from the District Attorney's case file(s).	LOW

ID	EVENT	INFORMATION EXCHANGED	SEND AGENCY	RECEIVE AGENCY	METHOD	FREQ
	A Parolee's background information is obtained from the TBI.	Arrest Data Basic ID Data Case ID Data Charge Data Enhanced ID Data Disposition Data Name Data Offense Data Personal ID Data	TBI	BOPP	Electronic: Tennessee Criminal History Repository	LOW
	A Parolee's background information is obtained from the Dept. of Human Services.	Basic ID Data Medical Data Name Data Social ID Data	DHS	BOPP	Paper: Forms, Reports, etc. *and/or* Electronic: DHS Records Mgmt. System	LOW
	A LEA is notified of the presence of a Parolee within their jurisdiction.	Address Data Basic ID Data Disposition Data Enhanced ID Data Mug Shot Data Name Data Parole Data	BOPP	LEA	Paper: Notification Report	MED
	A Court Clerk's Office provides a listing of new arrests to a Parole office.	Arrest Data Basic ID Data Booking Data Contact Data Just. Official ID Data Name Data Offense Data Schedule Data	Court Clerk	BOPP	Paper: New Arrest Report *or* Electronic: Court Clerk's Office Court Information System	HIGH
	A Parolee is arrested.	Arrest Data Basic ID Data Case ID Data Charge Data Enhanced ID Data Just. Official ID Data Name Data Offense Data Schedule Data	Court Clerk *and/or* LEA	BOPP	Paper: Affidavit of Complaint *and/or* Paper: Incident/Offense Report	MED

ID	EVENT	INFORMATION EXCHANGED	SEND AGENCY	RECEIVE AGENCY	METHOD	FREQ
	Parole is revoked.	Basic ID Data Case ID Data Just. Official ID Data Personal ID Data Name Data Parole Data Sentence Data Violation Data	BOPP	TDOC	Paper: Order to revoke Parole Paper: Confinement Authorization	MED

Parole: Data Elements

The data elements listed below are exchanged between multiple criminal justice agencies and are essential to the **Parole** process. See APPENDIX B: DATA ELEMENTS for more details.

ADDR	**Address Data**
ARRS	**Arrest Data**
BASC	**Basic Identification Data**
BOOK	**Booking Data**
CASE	**Case Identification Data**
CHRG	**Charge Data**
CONT	**Contact Data**
CUST	**Custody Data**
DISP	**Disposition Data**
IDEN	**Enhanced Identification Data**
JUST	**Justice Official Identification Data**
MEDI	**Medical Data**
PHOT	**Mug Shot Data**
NAME	**Name Data**
OFFN	**Offense Data**
RARO	**Parole Data**
PAYM	**Payment Data**
PERS	**Personal Identification Data**
SCHD	**Schedule Data**
SENT	**Sentence Data**
SOCI	**Social Identification Data**
VIOL	**Violation Data**

Parole: Technology

The table below details the primary computer systems and databases used in exchange of information during the **Parole** process. See Appendix D for more detailed information about computer systems and applications.

Parole – Technology

NAME	DESCRIPTION
Case Management System (CMS)	A case management system is used to manage the proceedings of a court case. Attorneys from the District Attorney's Office and the Public Defender's Office often use it. Maintained by: District Attorney's Office, Public Defender's Office
Court Information System (CIS)	A court information system is used to manage the daily affairs of the court clerk's office. It contains functionality for Case History, Master Person File, Bill-of-Cost, Case Disposition Rule & Execution, and Reporting System and generates a docket number. Maintained by: Court Clerk's Office
National Crime Intelligence Center (NCIC)	A computerized network that connects Law Enforcement Agencies throughout the United States and contains information about crimes that have occurred throughout the country. Criminal History and/or Arrest Warrant status information is commonly requested from NCIC. Maintained by: Federal Bureau of Investigation (FBI)
Records Management System (RMS)	A computer system that captures and stores information about a case and promotes an agency's ability to manage its records. Maintained by: Law Enforcement Agency, District Attorney's Office, Public Defender's Office
Tennessee Criminal History Repository (TCHR)	The Tennessee Criminal History Repository (TCHR) contains information about arrests, charges, and final dispositions of individuals who have committed offenses in Tennessee. Maintained by: Tennessee Bureau of Investigation (TBI)
Tennessee Offender Management Information System (TOMIS)	The computer system used by the Department of Correction and Board of Probation Parole to store and process information about sentencing, incarceration, release, Probation and Parole. The system tracks all activities of inmates, probationers and parolees. The Tennessee Department of Correction has recently implemented an Internet-based version of the software. Maintained by: Tennessee Department of Correction, Board of Probation and Parole

Parole: Forms

ID	FORM NAME	FORM DESCRIPTION
F-20	Parole Violation Report	The Probation and Parole Officer completes this form when a Parolee has been arrested and has violated the terms of Parole. The form is submitted to the District Attorney's Office for decision whether to request a Parole Revocation Hearing.

Parole Violation Report

TENNESSEE BOARD OF PROBATION AND PAROLE

Parole Violation Report – Administrative Actions

Parole Officer: Robert W. Denman Sr. **Date:**

Parolee: ☐		***No.:***	***Expiration Date:***
Race:	***Sex:***	***DOB:***	***Height:*** ***Weight:***
Eye Color:		***Hair Color:***	***Social Security No.:***

☐ Felony Conviction ☐ Felony Pending ☐ Misdemeanor Conviction ☐ Misdemeanor Pending ☐ Technical ☐ Absconder

Supervisor or Regional Director Review of Violation Report:

☐ The Supervisor concurs with the Officer's recommendation.
☐ The Regional Director concurs with the Officer's recommendation.
☐ The Supervisor does not concur with the Officer's recommendation.
☐ The Regional Director does not concur with the Officer's recommendation.
Basis of non-concurrence:
☐ Comments from Supervisor:

☐ Comments from Regional Director:

Signature of Supervisor: _____ Date: _____
Signature of Regional Director: _____ Date: _____

Director's Review and Action:

☐ Issue PV Warrant. Notify Director upon warrant service and waiver presentation.
☐ Report contains insufficient information..
☐ Insufficient time to proceed with revocation process.
☐ Withdraw PV warrant on:
☐ The Director does not concur with recommendation.
☐ The Director concurs with recommendation to withdraw warrant.
☐ Declare delinquency effective date of warrant.
☐ Proceed with extradition
☐ To be docketed for vacating delinquency
☐ See comments.
☐ Not recommended for return to Tennessee
☐ Board has lost jurisdiction. Withdraw PV Warrant.
☐ Refer to Interstate Compact.
☐ Request receiving state to:
☐ Enter into NCIC.
☐ Enter into TCIC (TRAP).
☐ Please advise Director as to status of case.
☐ PO provide their recommendation on vacating delinquency.
☐ Last follow-up submitted:
☐ Defer warrant decision pending disposition of charges.
☐ Comments: _____

☐ Rescission
☐ See comments.
☐ Return warrant to Central Office.
☐ See comments.
☐ Return to supervision.
☐ Place notification letter with holding authority.
☐ Absconder
☐ Serving time out of state
☐ See comments.
☐ See comments.
☐ See comments.
☐ Continue supervision.
☐ Close interest.
☐ Place on NCIC list.
☐ Place on TCIC (TRAP) list.
☐ See comments.
☐ Advise as to:
☐ Warrant served.
☐ Waiver results.

Signature of Director/Designee: _____ Date: _____

cc: Parole Violation File/Board File, Regional Director, and Parole Officer

Parole Violation Report (Continued)

TENNESSEE BOARD OF PAROLES
Parole Violation Report – Notice of Charges

DATE:
TO:
FROM PAROLE OFFICER:
OFFICE:

Parolee:			
Original Conviction:			
Original Sentence:		***Parole Expires:***	
Paroled From:		***Parole Date:***	
Parole Type:	Regular	***State:***	TN
Commutation (Y/N):	No	***Date of Commutation:***	N/A
Type(s) of Violation:		***Supervision Level:***	

Submitted by: _____ **Reviewed by:** _____
Page 1 **DENMRO01** **WATSJA01**

Parole Violation Report (Continued)

TENNESSEE BOARD OF PAROLES

Parole Violation Report – Parole Officer's Report

Parolee:		***No.:***
Parole Officer:	***Office:***	***Date:***

Parolee's Statement: *(If statement is taken, Miranda Rights must be given to parolee.)*

No Statement Taken

Parole Officer's Comments Concerning Parolee's Progress While Under Supervision:

Parole Officer's Recommendation.

Parole Officer's Comments.

Location of Parolee:

Attachments:

Administrative Actions Form
Signed Copy of Parole Certificate

Submitted by: _____ Reviewed by: _____

Parole: Opportunities for Improvement

The "Opportunities for Improvement" section provides a general list of observations compiled during the ICJ project interview phase. These ideas will be considerations for the development of the "To-Be" Model regarding the **Parole** process.

AUTOMATED DAILY ARREST REPORT SEARCH - As noted in the Probations section, there is a need for a computer program that would search the Arrest Report and automatically find Probationers and Parolees who have violated Parole and have been arrested.

VICTIM INFORMATION AND NOTIFICATION - Create interfaces between Criminal Justice Agencies and Victim Information and Notification systems to enhance the State of Tennessee's ability to notify and alert Victims of Crimes of the Offender's status.

CONCLUSION

Tennessee's "As-Is" Model of criminal justice information exchange that is contained in this document represents a concerted effort by the Integrated Criminal Justice Steering Committee, ICJ subcommittees, project manager and the project team. The model is a result of a comprehensive, practical project that involved interviewing 176 subject matter experts in a true cross section including 17 counties and 70 criminal justice agencies across the State of Tennessee. The details of the model represent the complexity of a state with 95 counties, and 31 judicial districts. It was a major priority to the ICJ Steering Committee to obtain information from a mixture of staff members of large metropolitan areas, middle sized towns, and rural centers throughout the state. This included state, county and local criminal justice agencies from highly technological organizations to small un-automated agencies that manage their workload with paper forms and files.

The key focus of the research was to understand and document the data exchanges that occurred across agencies rather than how internal processes within each entity worked. However, in order to understand the data exchange, it was important to understand the internal processes with the agencies. Again, the purpose of the "As-Is" Model is to highlight the exchange points between these organizations.

The "As-Is" Model is a depiction of how criminal justice data exchanges occur within Tennessee’s current system. It defines how things are being done today rather than how they should be done or how staff members wish they were done. The "To-Be" Model will describe the systems and procedures that could be implemented that will provide improvements, and eliminate redundancies and inefficiencies in the system.

The Gap Analysis will highlight the missing components and requirements to facilitate the implementation of the To-Be model. It will be used to reveal the disparities, constraints and assumptions as Tennessee develops its Road Map for future data integration in the State of Tennessee.

The Roadmap will consist of the plans to move forward to an implementation phase on major projects in Tennessee. It may include projects that range from one to five years in time of implementation. The Roadmap will also include training and retraining requirements as new methodologies and technology solutions are rolled out. In turn, the State of Tennessee will obtain a highly Integrated Criminal Justice system.

APPENDIX A: AGENCIES

AGENCY:	**Administrative Office of the Courts (AOC)**
WEB ADDRESS:	http://www.tsc.state.tn.us
DESCRIPTION:	The Administrative Office of the Courts provides support services to the state court system. The director, appointed by the Supreme Court, is chief administrative officer for the courts and oversees the AOC. Duties of the office include preparing the court system's annual budget; providing judicial education, law libraries, computers, other equipment, training and technical support for judges and other court personnel; assisting judges with case assignments; administering payroll accounts for the court system; conducting orientation for new judges; administering the official state criminal court reporters system; providing assistance to judicial committees; compiling data; and reviewing and disbursing funds to court-appointed attorneys representing indigents.

AGENCY:	**Board of Probation and Parole (BOPP)**
WEB ADDRESS:	http://www2.state.tn.us/bopp/home.htm
DESCRIPTION:	The mission of the Board of Probation and Parole to minimize public risk and promote lawful behavior by the prudent, orderly release and community supervision of adult offenders, at the least cost to taxpayers The Board of Probation and Parole is committed to a partnership with the citizens of Tennessee in promoting public safety and will be recognized as a leader in the area of Probation and Parole by: Providing a continuum of services for offenders from pre-sentence investigation through the expiration of sentences. Participating in cooperative efforts such as community policing, multi-purpose service centers, coordinated victim services and interagency efforts. Providing employees with access to and training in the use of advanced technologies. Fostering a highly professional staff that is proficient in offender management and support services. Promoting effectiveness and efficiency through the use of outcome measures and innovative approaches to service delivery.

AGENCY:	**Bureau of Justice Assistance**
WEB ADDRESS:	http://www.ojp.usdoj.gov/BJA/about/aboutbja.html
DESCRIPTION:	The Bureau of Justice Assistance (BJA) is a component of the Office of Justice Programs, U.S. Department of Justice, which also includes the Bureau of Justice Statistics, the National Institute of Justice, the Office of Juvenile Justice and Delinquency Prevention, and the Office for Victims of Crime. The mission of BJA is to provide leadership and assistance in support of local criminal justice strategies to achieve safe communities. BJA's overall goals are to (1) reduce and prevent crime, violence, and drug abuse and (2) improve the functioning of the criminal justice system. BJA's objectives in support of these goals are to: Encourage the development and implementation of comprehensive strategies to reduce and prevent crime and violence. Encourage the active participation of community organizations and citizens in efforts to prevent crime, drug abuse, and violence. Provide training and technical assistance in support of efforts to prevent crime, drug abuse, and violence at the national, state, and local levels. Reduce the availability of illegal weapons and develop strategies to address violence in our communities. Enhance the capacity of Law Enforcement agencies to reduce crime. Improve the effectiveness and efficiency of all aspects of the adjudication process, including indigent defense services. Assist states in freeing prison space for serious and violent offenders through the design and implementation of effective correctional options for nonviolent offenders. Enhance the ability of criminal justice agencies to access and use new information technologies. Encourage and support evaluation of the effectiveness of funded programs and dissemination of program results. BJA has three primary components: Policy, Programs, and Planning. The Policy Office provides national leadership in criminal justice policy, training, and technical assistance to further the administration of justice. It also acts as a liaison to national organizations that partner with BJA to set policy and help disseminate information on best and promising practices. The Programs Office coordinates and administers all state and local grant programs and acts as BJA's direct line of communication to states, territories, and tribal governments by providing assistance and coordinating resources. The Planning Office coordinates the planning, communications, and budget formulation and execution; provides overall BJA-wide coordination; and supports streamlining efforts.

AGENCY:	**Department of Correction (TDOC)**
WEB ADDRESS:	http://www.state.tn.us/correction
DESCRIPTION:	The mission of the Tennessee Department of Correction is to incarcerate criminal felony offenders in a secure, humane and disciplined institutional environment that meets the standards of the law, while emphasizing public safety, offender rehabilitation and the advancement of strong and efficient criminal justice policy. Currently, there are more than 19,000 Inmates assigned to the State's 15 prisons. The Department operates 12 of those facilities. Corrections Corporation of America manages three privately. Two of the State operated prisons are designated for women. Tennessee's Department of Correction is recognized nationally for its management of prison operations. It was one of the first Departments in the nation to earn national accreditation from the American Correctional Association, and it's a tradition that continues. Only a handful of Departments nationwide are fully accredited. The Tennessee Department of Correction supervises more than 20,000 Inmates and employs more than 5,000 people. There are 15 prisons in the state system, three of which are managed privately by Corrections Corporation of America. Female Inmates in the State of Tennessee are housed in two prisons, one that is located in Nashville and the other in Memphis. Male Inmates are housed in the 13 other prisons located across the state. Those Inmates in need of acute or continuing medical care are housed at the Lois M. DeBerry Special Needs Facility in Nashville.

AGENCY:	**Department of Safety: Criminal Investigations Division**
WEB ADDRESS:	http://www.tennessee.gov/safety/cid.html
DESCRIPTION:	The Criminal Investigations Division of the Tennessee Highway Patrol is charged with the investigation and prosecution of violations of Tennessee's auto and identity theft laws. Areas of responsibility include covert and overt investigation of suspect cases of auto and identity theft, stolen vehicle parts trafficking, and odometer fraud.

AGENCY:	**Department of Safety: Tennessee Highway Patrol**
WEB ADDRESS:	http://www.tennessee.gov/safety/thp.html
DESCRIPTION:	The Tennessee Highway Patrol and its highly trained state troopers and enforcement Officers are responsible for safety on more than 15,000 miles of state and federal highways. The Tennessee Highway Patrol (THP) is responsible for the enforcement of all federal and state laws relating to traffic. Serving the entire state of Tennessee with substations in each of its 95 counties, the THP has district headquarters in the following eight locations: Knoxville, Chattanooga, Nashville, Memphis, Fall Branch, Cookeville, Lawrenceburg, and Jackson. The THP has recently absorbed the abolished Capitol Police and Commercial Vehicle Enforcement Divisions.

AGENCY:	**District Attorneys General Conference (TNDAGC)**
WEB ADDRESS:	http://www.tndagc.com
DESCRIPTION:	The Tennessee District Attorneys General Conference was created by the General Assembly in 1961 to provide for a more prompt and efficient administration of justice in the courts of this state. It is comprised of the District Attorneys General from the state's 31 judicial districts. The District Attorneys General is elected for a term of eight years and is responsible for the prosecution of criminal cases on behalf of the state. The Office of the Executive Director, which was created in 1972, serves as the central administrative office for the District Attorneys General Conference. The office is responsible for budgeting, accounting, payroll, personnel, property management and the administration of all fiscal matters pertaining to the District Attorneys General and their staff. Other duties include providing law libraries to each District Attorney's office, coordination of prosecution efforts, development and implementation of training programs and automation support. This office is also responsible for maintaining liaison between the District Attorneys General and other governmental agencies, including the courts, the General Assembly, the executive branch, and the Office of the Attorney General and Reporter. The Executive Director is elected by the District Attorneys General for a term of four years and serves as a member of the Tennessee Judicial Council.

AGENCY:	**District Public Defender's Conference**
WEB ADDRESS:	http://www.state.tn.us/sos/bluebook/online/section3/pdc.pdf
DESCRIPTION:	The District Public Defenders fulfill the state's obligation under the U.S. Constitution to provide a lawyer to person's accused of crimes that cannot afford a lawyer. District Public Defenders are attorneys elected in each judicial district who serve, as appointed by the courts, to represent indigent persons facing deprivation of liberty in criminal matters. The statewide system of public defenders was created by the General Assembly in 1989 as an alternative to the practice of court-appointed private attorneys. The Office of the Executive Director serves as the central administrative office for each of the 31 District Public Defenders. The Executive Director is responsible for budgeting, payroll, purchasing, personnel, and administration of all fiscal matters pertaining to the operation of District Public Defender offices. Other duties include coordinating defense efforts of the various District Public Defenders, development of training programs, and maintaining liaison with various state government agencies. The Executive Director is elected by the District Public Defenders for a four-year term and serves as a member of the Judicial Council and other judicial planning groups.

AGENCY:	**Federal Bureau of Investigation (FBI)**
WEB ADDRESS:	http://www.fbi.gov
DESCRIPTION:	The FBI's priorities include protecting the U.S. from terrorist attacks, from foreign intelligence operations, and from cyber-based attacks and high-technology crimes; combating public corruption at all levels; protecting civil rights; combating international and national organized crime, major white-collar crime, and significant violent crime; supporting our Law Enforcement and intelligence partners; and upgrading FBI technology.

AGENCY:	**International Association of Chiefs of Police (IACP)**
WEB ADDRESS:	http://www.theiacp.org
DESCRIPTION:	The International Association of Chiefs of Police is the world's oldest and largest nonprofit membership organization of police executives, with over 19,000 members in over 89 different countries. IACP's leadership consists of the operating chief executives of international, federal, state and local agencies of all sizes.

AGENCY:	**Justice Information Sharing Professionals (JISP)**
WEB ADDRESS:	http://www.jisp.us
DESCRIPTION:	Justice Information Sharing Professionals is a national organization that is interested in promoting best practices, standards and resources for solving the issues of information sharing within Criminal and Juvenile Justice, at local, state and national levels. JISP exists today as a group of committed justice information systems practitioners from various projects and jurisdictions across the nation who works together to help facilitate communication and assistance among project and program mangers. The JISP Board of Directors is comprised of ten experienced and reputed project/program leaders from various local and state criminal justice information sharing initiatives in the United States. Together, they have begun to shape a forum for centralizing and standardizing issues and solutions for integration justice information systems embracing an enterprise-wide and national view. JISP has approximately 200 members from across the United States criminal justice community who share ideas, concepts, standards, experiences and resources within its peer network.

AGENCY:	**National Criminal Justice Association (NCJA)**
WEB ADDRESS:	http://www.ncja.org
DESCRIPTION:	The National Criminal Justice Association exists to promote the development of justice systems in states, tribal nations, and units of local government that enhance public safety; prevent and reduce the harmful effects of criminal and delinquent behavior on victims, individuals and communities; adjudicate defendants and sanction offenders fairly and justly; and that are effective and efficient.

AGENCY:	**National Sheriff's Association (NSA)**
WEB ADDRESS:	http://www.sheriffs.org
DESCRIPTION:	The National Sheriffs' Association is now in its sixty-second year of serving the Law Enforcement/criminal justice professionals of the nation. The NSA a non-profit organization dedicated to raising the level of professionalism among those in the criminal justice field. Through the years, NSA has been involved in numerous programs to enable sheriffs, their deputies, chiefs of police, and others in the field of criminal justice to perform their jobs in the best possible manner and to better serve the people of their city/counties or jurisdictions.

AGENCY:	**Office of Criminal Justice Programs (OCJP)**
WEB ADDRESS:	http://www.state.tn.us/finance/rds/ocjp.htm
DESCRIPTION:	The Office of Criminal Justice Programs is committed to a safer Tennessee for all of its citizens. OCJP functions as a strategic planning agency that secures, distributes and manages federal and state grant funds for Tennessee. While collaborating with other public and non-profit agencies, OCJP utilizes these grant monies to support innovative projects statewide in efforts to reduce criminal activity, provide services for victims of crime and promote overall enhancement of the criminal justice system in Tennessee.

AGENCY:	**Office of Information Resources (OIR)**
WEB ADDRESS:	http://www.state.tn.us/finance/oir
DESCRIPTION:	The Office for Information Resources provides direction, planning, resources, execution and coordination in managing the information systems needs of the State of Tennessee. OIR is a division within the Department of Finance & Administration (F&A), guided by a Deputy Commissioner and Chief Information Officer. OIR's clients primarily consist of State agencies, departments and commissions. OIR serves as staff to the Information Systems Council (ISC), and under the ISC's guidance, provides technical direction, services, and infrastructure to the State of Tennessee.

AGENCY:	**SEARCH - National Consortium for Justice Information and Statistics**
WEB ADDRESS:	http://www.search.org
DESCRIPTION:	SEARCH is a nonprofit membership organization created by and for the States, which is dedicated to improving the criminal justice system and the quality of justice through better information management, the effective application of information and identification technology, and responsible law and policy. Since 1969, SEARCH's primary objective has been to identify and help solve the information management problems of State and local justice agencies confronted with the need to exchange information with other local agencies, State agencies, agencies in other States, or with the Federal government. SEARCH is governed by a Membership Group comprised of one gubernatorial appointee from each of the 50 States, the District of Columbia, Puerto Rico and the Virgin Islands. Members are primarily State-level justice officials responsible for operational decisions and policymaking concerning the management of criminal justice information, particularly criminal history information. A staff of professionals works from SEARCH headquarters in Sacramento, California, to implement solutions identified by the Membership Group. Through its staff and with the direction of the Membership, SEARCH provides justice agencies with diverse products, services and resources through three interlocking programs: Systems and Technology, Law and Policy, and Research and Statistics. Funding for SEARCH activities is provided by annual fees from Member States for the operation of the consortium and Board of Directors; grants from such U.S. Department of Justice agencies as the Bureau of Justice Assistance, Bureau of Justice Statistics and National Institute of Justice; State grants; and Federal, State and local contracts.

AGENCY:	**State Court Clerks Association of Tennessee**
WEB ADDRESS:	NA
DESCRIPTION:	The purpose of the State Court Clerks Association of Tennessee is to affect a closer and more workable union of the State Court Clerks Association of Eastern, Middle and Western Tennessee; to promote legislation to the best interest of the clerks of the various counties; to conduct seminars relating to common problems and office procedures of the members; and to promote and encourage good fellowship among the members.

AGENCY:	**Tennessee Association of Chiefs of Police (TACP)**
WEB ADDRESS:	NA
DESCRIPTION:	The International Association of Chiefs of Police focuses on advancing the science and art of police services; developing and disseminating improved administrative, technical and operational practices and promote their use in police work; to foster police cooperation and the exchange of information and experience among police administrators throughout the world; to bring about recruitment and training in the police profession of qualified persons; and to encourage adherence of all police Officers to high professional standards of performance and conduct. It also is hereby declared to be the policy of the Association to cooperate with existing police organizations of recognized professional and technical standing. The Executive Board may arrange for joint research projects, publications, secretarial assistance and participation in.

AGENCY:	**Tennessee Bureau of Investigation (TBI)**
WEB ADDRESS:	http://www.tbi.state.tn.us
DESCRIPTION:	The Tennessee Bureau of Investigation provides up-to-date investigative, forensic science and crime information services in support of Tennessee's entire criminal justice system. The TBI takes pride in the fact that it has evolved over the years into a respected Law Enforcement organization with highly trained, dedicated, professional employees. The Bureau takes particular pride in being one of the few Law Enforcement agencies in the country to achieve the level of accreditation that it has, with both CALEA and ASCLD/LAB, and continues its commitment to maintain those accreditations. In July 2000, the TBI moved into a new consolidated headquarters building in Nashville and December 2001 saw the grand opening of a consolidated facility in Memphis. These facilities are allowing the TBI to remain at the forefront of the application of new technologies in criminal investigations, in working to improve communication among other state and local Law Enforcement agencies, and in vigorously pursuing the ultimate goal summed up in the Bureau's mission statement, to ensure "that guilt shall not escape, nor innocence suffer. The TBI is organized into five major divisions: the Criminal Investigation Division, the Drug Investigation Division, the Forensic Services Division, the Information Systems Division, and the Administrative Services Division.

AGENCY:	**Tennessee Sheriffs Association (TSA)**
WEB ADDRESS:	NA
DESCRIPTION:	The Tennessee Sheriffs Association (TSA) is a statewide organization that consists of the Sheriff's of most of the 95 Tennessee Counties. The group has a Board of Directors and a chairperson who leads the group. They hold board meetings and general assembly meetings periodically throughout the year to disseminate relevant criminal justice information.

AGENCY:	**US Department Of Justice - Office Of Justice Programs**
WEB ADDRESS:	http://www.it.ojp.gov
DESCRIPTION:	www.it.ojp.gov is an easy-to-use, free access Web site designed to give practitioners a centralized place to find information sharing and technology integration resources. The Web site is specifically designed to serve the justice and public safety communities. The Web site offers a variety of ways to access information and aims to assist practitioners as they search to find needed information.

APPENDIX B: DATA ELEMENTS

The fundamental data elements captured, modified and transferred to other agencies within the criminal justice process are listed below.

Data elements frequently exchanged between two or more Tennessee's criminal justice agencies are listed below. The data elements have been organized into logical data sets based on the regularity in which the elements are exchanged as a group. The information below is not a comprehensive listing of data exchanged during criminal justice processing. It is a summary of data elements having the greatest frequency of exchange amongst Tennessee's criminal justice agencies.

ADDR	**ADDRESS DATA** *Applies to Agencies, Defendants, Suspects, Victims & Witnesses*
ADDR1	Address Line #1
ADDR2	Address Line #2
ADDR3	City
ADDR4	State
ADDR5	Zip Code

Address Data is exchanged during:

Incident & Investigation
Warrant Processing
General Sessions Court
Circuit or Criminal Court

ARRS	**ARREST DATA**
ARRS1	Arrest Date
ARRS2	Arrest Time
ARRS3	Arrest Location
ARRS4	Arrest Type
ARRS5	Arrest Reason
ARRS6	Arrest Comments

Arrest Data is exchanged during:

Incident & Investigation
Arrest & Booking
General Sessions Court
Circuit or Criminal Court

BASC	**BASIC IDENTIFICATION DATA** *Applies to Officials, Defendants, Victims & Witnesses*
BASC1	Sex
BASC2	Race
BASC3	Ethnicity
BASC4	Date of Birth

Basic ID Data is exchanged during:

Incident & Investigation
Warrant Processing
Arrest & Booking
General Sessions Court
Circuit or Criminal Court
Probation
Correction
Parole

BOND	BOND DATA
BOND1	Bail/Bond Amount
BOND2	Bail/Bond Conditions
BOND3	Bond Type
BOND4	Receipt Number
BOND5	Date Bond Set
BOND6	Date Bond Posted
BOND7	Surety Name
BOND8	Termination Date
BOND9	Termination Type Code
BOND10	Comments

Bond Data is exchanged during:

Arrest & Booking
General Sessions Court
Circuit or Criminal Court

BOOK	BOOKING DATA
BOOK1	Booking Agency Name
BOOK2	Booking Officer
BOOK3	Booking Number
BOOK4	Booking Date
BOOK5	Booking Time
BOOK6	Comments

Booking Data is exchanged during:

Arrest & Booking

CASE	CASE IDENTIFICATION DATA *Applies to various justice agencies case files*
CASE1	Agency Type/Name
CASE2	Agency Identification Number/Division
CASE3	Case Number
CASE4	Case Type
CASE5	Case Status
CASE6	Case Filed Date
CASE7	Case Closed Date
CASE8	Comments

Case ID Data is exchanged during:

Incident & Investigation
Warrant Processing
Arrest & Booking
General Sessions Court
Circuit or Criminal Court
Probation
Correction
Parole

CHRG	CHARGE DATA *Applies to charges filed by LEA & District Attorneys*
CHRG1	Agency Name
CHRG2	Offense Description
CHRG3	Code Section Number
CHRG4	Code Subsection Number
CHRG5	Code Description
CHRG6	Charge Count
CHRG7	Amended Code
CHRG8	Filed Date
CHRG9	Weapon Involved Indicator
CHRG10	Weapon Type
CHRG11	Habitual Offender Indicator
CHRG12	Gang Affiliation Indicator
CHRG13	Bias Indicator
CHRG14	Comments

Charge Data is exchanged during:

Incident & Investigation
Warrant Processing
Arrest & Booking
General Sessions Court
Circuit or Criminal Court
Probation
Correction
Parole

CONT	CONTACT DATA *Applies to Officials, Defendants, Victims, & Witnesses*
CONT1	Contact Type/Name
CONT2	Residence Telephone Number
CONT3	Business Telephone Number
CONT4	Cell Phone Number
CONT5	Pager Number
CONT6	Fax Number
CONT7	E-Mail Address

Contact Data is exchanged during:

Incident & Investigation
Warrant Processing
Arrest & Booking
General Sessions Court
Circuit or Criminal Court
Probation
Parole

CUST	CUSTODY DATA *Applies to custody in County Jails, Workhouses, & Prisons*
CUST1	Custody Term
CUST2	Custody Start Date
CUST3	Custody Start Time
CUST4	Custody Facility
CUST5	Custody Status
CUST6	Reason Confined
CUST7	Inmate Number
CUST8	Credit for Time Served Amount
CUST9	Time Served
CUST10	Custody Comments

Custody Data is exchanged during:

Arrest & Booking
Probation
Correction
Parole

DISP	DISPOSITION DATA
DISP1	Disposition Type
DISP2	Disposition Description
DISP3	Disposition Date
DISP4	Verdict
DISP5	Disposition Comments

Final Disposition Data is exchanged during:

Incident & Investigation
General Sessions Court
Circuit or Criminal Court
Probation
Correction
Parole

DRIV	DRIVER'S LICENSE DATA
DRIV1	Driver's License Number
DRIV2	Driver's License State
DRIV3	Driver's License Status
DRIV4	Driver's License Status Date

Driver's License Data is exchanged during:

Incident & Investigation
Warrant Processing

IDEN	ENHANCED IDENTIFICATION DATA *Applies to Defendants, Victims, & Witnesses*
IDEN1	Height
IDEN2	Weight
IDEN3	Eye Color
IDEN4	Hair Color
IDEN5	Alias
IDEN6	Maiden Name
IDEN7	Place of Birth
IDEN8	Citizenship
IDEN9	Scars/Marks/Tattoos/Amputations
IDEN10	Date of Death
IDEN11	Disability
IDEN12	Deformity
IDEN13	Blood Type
IDEN14	Enhanced Identification Comments

Enhanced ID Data is exchanged during:

Incident & Investigation
Warrant Processing
Arrest & Booking
General Sessions Court
Circuit or Criminal Court
Probation
Correction
Parole

FING	FINGERPRINT DATA *Applies to fingerprints collected by LEA & TDOC*
FING1	Fingerprints (Images)
FING2	Date Fingerprinted
FING3	Reason fingerprints were collected
FING4	Name of Agency submitting fingerprints
FING5	Name of Officer that collected fingerprints

Fingerprint Data is exchanged during:

Incident & Investigation
Arrest & Booking
Correction

JUST	JUSTICE OFFICIAL IDENTIFICATION DATA *Applies to personnel from various justice agencies*
JUST1	Agency Type/Name
JUST2	Official Type/Rank
JUST3	Official Identification/Badge Number
JUST4	Business Telephone Number
JUST5	Fax Number
JUST6	E-Mail Address

Justice Official ID Data is exchanged during:

Incident & Investigation
Warrant Processing
Arrest & Booking
General Sessions Court
Circuit or Criminal Court
Probation
Correction
Parole

MEDI	MEDICAL DATA
MEDI1	Medical History
MEDI2	Special Conditions/Needs
MEDI3	Comments

Medical Data is exchanged during:

Incident & Investigation

Probation

Correction

Parole

PHOT	MUG SHOT DATA *Applies to photographs taken by LEA & TDOC*
PHOT1	Photograph/Digital Image
PHOT2	Date Photograph was taken
PHOT3	Reason photograph was taken
PHOT4	Name of Agency that took photograph
PHOT5	Name of Officer that took photograph

Mug Shot Data is exchanged during:

Incident & Investigation

Arrest & Booking

Correction

NAME	NAME DATA *Applies to Officials, Defendants, Victims, & Witnesses*
NAME1	First Name
NAME2	Middle Name
NAME3	Last Name
NAME4	Suffix

Name Data is exchanged during:

Incident & Investigation

Warrant Processing

Arrest & Booking

General Sessions Court

Circuit or Criminal Court

Probation

Correction

Parole

OFFN	OFFENSE DATA
OFFN1	Offense Type
OFFN2	Offense Description
OFFN3	Offense Location
OFFN4	Offense Date
OFFN5	Offense Time
OFFN6	Offense Narrative
OFFN7	Agency reporting Offense Name

Offense Data is exchanged during:

Incident & Investigation

Warrant Processing

Arrest & Booking

General Sessions Court

Circuit or Criminal Court

Probation

Correction

Parole

PARO	PAROLE DATA	Parole Data is exchanged during:
PARO1	Parole Type	Incident & Investigation
PARO2	Parole Term	General Sessions Court
PARO3	Parole Start Date	Circuit or Criminal Court
PARO4	Parole Eligibility Date	Parole
PARO5	Parole Discharge Date	
PARO6	Parole Discharge Type	
PARO7	Parole Conditions	

PAYM	PAYMENT DATA *Applies to fees, fines, restitution, & other payments*	Payment Data is exchanged during:
PAYM1	Payment Amount	General Sessions Court
PAYM2	Payment Type/Reason	Circuit or Criminal Court
PAYM3	Payment Start Date	Probation
PAYM4	Payment End Date	Correction
PAYM5	Payment Term	Parole
PAYM6	Total Payment Amount	
PAYM7	Total Payment Due Date	
PAYM8	Payment Method	
PAYM9	Receipt Number	
PAYM10	Payment Comments	

PERS	PERSONAL IDENTIFICATION DATA *Applies to Defendants, Victims, & Witnesses*	Personal ID Data is exchanged during:
PERS1	Social Security Number	Incident & Investigation
PERS2	State Identification Number	Warrant Processing
PERS3	TOMIS Identification Number	Arrest & Booking
PERS4	Local Justice Agency Identification Number	General Sessions Court
PERS3	FBI Number	Circuit or Criminal Court
		Probation
		Correction
		Parole

PLEA	PLEA DATA
PLEA1	Plea Type
PLEA2	Plea Date
PLEA3	Plea Comments

Plea Data is exchanged during:

General Sessions Court

Circuit or Criminal Court

PROB	PROBATION DATA
PROB1	Probation Term
PROB2	Probation Type
PROB3	Probation Start Date
PROB4	Probation Discharge Date
PROB5	Probation Modification Date
PROB6	Probation Reinstatement Date
PROB7	Conditions

Probation Data is exchanged during:

Incident & Investigation

General Sessions Court

Circuit or Criminal Court

Probation

PROP	PROPERTY DATA *Applies to Evidence and Inmate Property*
PROP1	Property Serial/Identification Number
PROP2	Property Type
PROP3	Property Description
PROP4	Property Collection Date
PROP5	Property Collection Time
PROP6	Property Held Reason
PROP7	Property Release Date
PROP8	Property Comments

Property Data is exchanged during:

Incident & Investigation

Arrest & Booking

Correction

RLSE	RELEASE DATA *Applies to releases from Jail, Workhouse, & Prison*
RLSE1	Release Type
RLSE2	Release Conditions
RLSE3	Projected Release Date
RLSE4	Actual Release Date
RLSE5	Release Time
RLSE6	Released To Name

Release Data is exchanged during:

Arrest & Booking

Probation

Correction

Parole

SCHD	SCHEDULE DATA *Applies to various justice events*
SCHD1	Event Name/Type
SCHD2	Event Date
SCHD3	Event Time
SCHD4	Event Result
SCHD5	Event Comments

Schedule Data is exchanged during:

Arrest & Booking
General Sessions Court
Circuit or Criminal Court
Probation
Correction
Parole

SENT	SENTENCE DATA
SENT1	Sentence Type
SENT2	Sentence Minimum Term
SENT3	Sentence Maximum Term
SENT4	Sentence Suspended Term
SENT5	Sentence Consecutive/Concurrent Indicator
SENT6	Sentence Begin Date
SENT7	Sentence Begin Time
SENT8	Sentencing Date
SENT9	Sentencing Judge's Name
SENT10	Offense Severity Level
SENT11	Sentencing Range
SENT12	Sentencing Conditions
SENT13	Sentence Comments
SENT14	Offense Severity Level

Sentence Data is exchanged during

Incident & Investigation
General Sessions Court
Circuit or Criminal Court
Probation
Correction
Parole

SOCI	SOCIAL IDENTIFICATION DATA *Applies to Defendants, Victims, & Witnesses*
SOCI1	Employer
SOCI2	Occupation
SOCI3	Education/Training/Military
SOCI4	Marital Status
SOCI5	Social Identification Comments

Social ID Data is exchanged during:

Incident & Investigation
Warrant Processing
Probation
Correction
Parole

SUBP	SUBPOENA DATA
SUBP1	Issue Date
SUBP2	Issuing Court
SUBP3	Issuing Judge's Name
SUBP4	Subpoena Request Date
SUBP5	Subpoena Service Type
SUBP6	Subpoena Service Date
SUBP7	Subpoena Service Time
SUBP8	Subpoena Number
SUBP9	Subpoena Reason
SUBP10	Subpoena Comments

Subpoena Data is exchanged during:

General Sessions Court

Circuit or Criminal Court

VEHI	VEHICLE DATA
VEHI1	Vehicle License Number
VEHI2	Vehicle License State
VEHI3	Vehicle Identification Number (VIN)
VEHI4	Vehicle Make
VEHI5	Vehicle Model
VEHI6	Vehicle Year
VEHI7	Vehicle Color
VEHI8	Vehicle Style
VEHI9	Vehicle Registration Status
VEHI10	Vehicle Registration Status Date

Vehicle Data is exchanged during:

Incident & Investigation

Warrant Processing

Arrest & Booking

VIOL	VIOLATION DATA *Applies to Probation and Parole violations*
VIOL1	Supervision Type
VIOL2	Violation Date
VIOL3	Violation Description
VIOL4	Revocation Date
VIOL5	Termination Date
VIOL6	Violation Comments

Violation Data is exchanged during:

Incident & Investigation

Warrant Processing

Arrest & Booking

General Sessions Court

Circuit or Criminal Court

Probation

Parole

WARR	WARRANT DATA *Applies to Arrest and Search Warrants*
WARR1	Warrant Type
WARR2	Warrant Number
WARR3	Warrant Issuing Court
WARR4	Warrant Issuing Judge's Name
WARR5	Warrant Issue Date
WARR6	Warrant Requested by Name
WARR7	Warrant Request Date
WARR8	Warrant Requested Reason
WARR9	Warrant Cancellation Date
WARR10	Warrant Cancellation Time
WARR11	Warrant Executed by (Name)
WARR11	Warrant Execution Date
WARR12	Warrant Execution Time
WARR13	Warrant Comments

Warrant Data is exchanged during:

Incident & Investigation

Warrant Processing

Arrest & Booking

General Sessions Court

Circuit or Criminal Court

Probation

Parole

APPENDIX C: SOFTWARE APPLICATIONS BY CATEGORY

This appendix details key software applications used by Tennessee's criminal justice agencies. This is not an inclusive list and **should not** be perceived as an endorsement of any particular vendor's product. It has been included in the As-Is model as reference material regarding software that is currently being used in the State of Tennessee.

Case Management	Case&Point Criminal Activities Intelligence Network (CAIN) ProLaw
Correction	Jail Management System (JMS) Tennessee Offender Management Information System (TOMIS) Victim Notification System (VINE)
Court Information Systems	Bridge Court Management Software CITED Criminal Justice Information System (CJIS) Criminal Justice System (CJUS) DataQuest Court Docket FullCourt Government Service Automation (GSA) HTE Justice Information Management System (JIMS) T-CAST Tennessee Court Information System (TnCIS)
Document Imaging and Management	DocSTAR FileNet Law Enforcement Records Information System (LERIS) Onbase

Law Enforcement and Records Management Systems	Automated Fingerprint Identification System (AFIS) COPSRMS Criminal Justice Information System (CJIS) Criminal Justice Kiosk Criminal Justice System (CJUS) DataMaxx DOS Driver's License History DOS Driver's License Issuance DOS Vehicle Title & Registration Felony Offender Information Lookup (FOIL) Homeland Security Information Network (HSIN) HTE Intergraph Computer Aided Dispatch System Justice Information Management System (JIMS) Justice Support System (JSS) National Crime Intelligence Center (NCIC) National Incident Based Reporting System (NIBRS) NetRMS Printrak Fingerprint Identification System Sheriffs Office Management System (SOMS) Spillman TBI Instant Check System (TICS) Tennessee Applicant Processing Services (TAPS) Tennessee Criminal History Repository (TCHR) Tennessee Incident Based Reporting System (TIBRS) Tennessee Judicial Information System (TJIS) Tennessee Repository for Apprehension of Persons (TRAP) Tiburon VisionRMS
Networking and Communications	LiveScan National Law Enforcement Telecommunication System (NLETS) Tennessee Information Enforcement System (TIES)

APPENDIX D: SYSTEMS IN ALPHABETICAL ORDER

APPLICATION:	**Automated Fingerprint Identification System (AFIS)**
CATEGORY:	Law Enforcement
CONTACT INFO:	Tennessee Bureau of Investigation 901 R.S. Gass Blvd Nashville, TN 37216-2639 (615) 744-4000 Fax: (615) 744-4599 http://www.tbi.state.tn.us
DESCRIPTION:	The Automated Fingerprint Identification System (AFIS) is a computer system and database that is housed at the TBI. It contains digital fingerprint images and other information to establish an individual's identity and criminal history in Tennessee. Digital fingerprint images and other identification information are sent to AFIS via LiveScan. The fingerprints are compared to those that are already in the AFIS database. If a match is found, AFIS returns the State Identification Number (SID) and other identifying information of the individual. A criminal history may be queried based on the SID number. The TBI AFIS is not the only one in the state: Davidson, Hamilton, Knox and Shelby Counties all have their own AFIS system as well. Each system forwards the information to TBI's AFIS, and TBI forwards information on to the FBI IAFIS.

APPLICATION:	**Bridge Court Management Software**
CATEGORY:	Court Information System
CONTACT INFO:	Bridge Computer Systems Inc. 6421 Kingsport Highway Gray, TN, 37615 (423) 239-9497 www.bridgeweb.org
DESCRIPTION:	Bridge is a vendor-developed Court Information System that supports Circuit, Civil, Criminal, Chancery, General Sessions, and Juvenile Courts. Key features of Bridge include Case History, Master Person File, Bill-of-Cost, Dockets, Case Disposition Rule & Execution, and Reporting.

APPLICATION:	**Case&Point**
CATEGORY:	Case Management
CONTACT INFO:	Corporate Legal Solutions, Inc. 2305 S. Highway 121, Suite 175 Lewisville, TX 75067 (214) 488-2626 (800) 597-4361 www.caseandpoint.com
DESCRIPTION:	Case&Point software is designed by corporate attorneys to manage all types of case matters. Case&Point Enterprise Edition includes the following modules: Case Management, General Matter Management, Contract Management, Trademark Management, Patent Management, Real Estate Management, Outside Counsel Expense Tracking, Budget Management, e-Document Management, Physical File Control, Internal Timekeeping, Event Tracking / Calendaring, Report System with 5 report wizards, Report Development Kit, Full text search on key fields, data warehouse for budget vs. actual analysis.

APPLICATION:	**CITED**
CATEGORY:	Court Information System
CONTACT INFO:	Knox County Information Systems Shirley Walker 400 West Main Knoxville, TN 37902 (865) 215-3786
DESCRIPTION:	CITED is a custom-developed FoxPro program that is used by the General Sessions Court Clerk's Office. The system allows users to enter, process, and store Citation information. The system assigns a Docket Number to the Citation. Knox County enters a variety of Citations into the system and manages the numbers in such a way that there are no duplicate citation numbers.

APPLICATION:	**COPSRMS**
CATEGORY:	Law Enforcement
CONTACT INFO:	Capella Systems, Inc. 208 Second Avenue Cedar Rapids, IA 52406 319.366.3155 Fax: 319.366.6552 info@capellasystems.com http://www.newdawntech.com/capella.htm
DESCRIPTION:	COPSRMS is a Records Management System that is designed to collect and provide information regarding Law Enforcement Agencies with incident and crime reporting. It provides Administration personnel with information regarding the frequency, duration, time period, call types and response times of their services. System coordinators are able to obtain a summary of their patrol activities including incident types, procedures performed, arrest rates, citations issued and patrol strategy effectiveness. Command staff members are able to evaluate the effectiveness of prevention and suppression procedures for use in future planning and education. It also provides regulatory agencies with data from these agencies.

APPLICATION:	**Criminal Activities Intelligence Network (CAIN)**
CATEGORY:	Case Management
CONTACT INFO:	Tennessee District Attorneys General Conference Jay Palmer, Director of Information Systems 226 Capitol Boulevard, Suite 800 Nashville, TN 37243 jay@tndagc.com www.tndagc.com Pam Ackerman pla711@aol.com
DESCRIPTION:	CAIN is a custom-developed Case Management program that was built in FoxPro for the Tennessee District Attorney Offices. The CAIN application is used to: collect, store, and display data associated with the workflow of the DA's office; search for and display TCA information; create and print letters or forms; ability to collect data while in the courtroom and download the data collected into the master database; design and produce custom reports; share designated information with the central repository of the District Attorney conference; and develop and manage a calendar of events. Local CAIN users store their case data in their local environments. Each morning, the local data is copied to data files and moved to a FTP Site. Data files are retrieved from the FTP Sites and downloaded into the central database in the DA conference office in Nashville. The central database in Nashville is in a SQL Server environment. All CAIN users have access to the central database via the State WAN.

APPLICATION:	**Criminal Justice Information System (CJIS)**
CATEGORY:	Law Enforcement Court Information System
CONTACT INFO:	Justice Integration Services (JIS) of Davidson County Kevin Sanders, Project Lead 211 Union St., Suite 515 Nashville, TN 37201 (865) 215-4431 kevinsanders@jis.nashville.org http://www.jis.nashville.org
DESCRIPTION:	The Criminal Justice Information System (CJIS) is a Court Information System that was developed with PowerBuilder on a Unisys computer with an Oracle database. CJIS is designed to meet the business processing requirements of the Davidson County Metro/State Criminal Courts and criminal justice agencies. These requirements include records management functions, calendaring, Grand Jury case processing, financial processing, and Police interface functions. The records management functions include affidavit, charging instrument, bond, and case management. The calendaring requirements consist of the ability to set up calendar docket sessions in which cases can be scheduled. The ability to set caps for the number of Defendants and cases is included as well as conflict checking for judges, police Officers and attorneys. The system meets the reporting requirements of the Administrative Office of the Courts (AOC) and the Tennessee Bureau of Investigation (TBI). CJIS contains Offender's Criminal History, Arrest Summary, Jail Summary, Case Dispositions, Pending issues, Court Dockets, and Disposition Forms. The CJIS application also handles financial processing for Criminal Court, General Sessions and Juvenile cases. Financial processing includes the assessment of fines and costs through case events, collection of fines and costs, automatic posting of received funds to the General Ledger (GL), and disbursement of collected funds to the appropriate entities. There are plans to store images of the Citations within CJIS in the near future. The Justice Integration Services (JIS) is the agency that oversees CJIS project. JIS is one of the major JIS projects.

APPLICATION:	**Criminal Justice Kiosk**
CATEGORY:	Law Enforcement
CONTACT INFO:	Memphis Police Department Lieutenant Jim Harvey Organized Crime Unit, Division of Police Services (901) 528-2338 jharvey@memphispolice.org Memphis Sheriff Office John Harvey Lieutenant/Director, Information Systems (901) 545-5901 john.harvey@shelby-sheriff.org
DESCRIPTION:	The Criminal Justice Kiosk is a web-enabled search engine originally developed in FoxPro by John Harvey of the Memphis Sheriff's Office. The source code was provided to the Memphis Police Department where Jim Harvey helped to create the Criminal Justice Kiosk for the Memphis Police. The team developed an interface that gathers information from multiple agency databases including: Memphis Police Department, Shelby County Sheriff's Department, Pawn Shops, Local Utility Company, and Shelby County's JMS & JSS. Basically, the Kiosk is a series of web-enabled databases that are shared within the Shelby County Sheriff's Office, Memphis Police Department, and the Attorney General's Office. Criminal justice agencies in Mississippi, Arkansas, and Tipton County have been granted access as well.

APPLICATION:	**Criminal Justice System (CJUS)**
CATEGORY:	Court Information System Jail Management Law Enforcement
CONTACT INFO:	Hamilton County Information Technology Services Bart McKinney, Programming Manager Hamilton County Info. Tech. Services 115 East 7th Street Chattanooga, TN 37402 (423) 209-6250
DESCRIPTION:	Hamilton County's Criminal Justice (CJUS) System in is a custom application that was written in COBOL, CICS, and EZTRIEVE PLUS. The Sheriff's Office uses the system to book and track prisoners. It has a module to manage the Commissary inventory, prisoner deposits, purchases and balances. It provides a way to enter and track Medical and Drug information, Visitor information and produces many reports. The system interfaces with a digital fingerprinting and mug shot system. The Criminal Court Clerk uses the system for case management, scheduling, dockets, witnesses, subpoenas and summons, bound over defendants, board bills for the Jury, revocations. The bookkeeping part of the system allows the Clerk's office to create and print receipts while automatically updating the balance of the cases involved, deposit money, disburse money to appropriate agencies, and make journal entries when necessary. The General Sessions Criminal System is similar to the Criminal Court Clerk system for case management and bookkeeping. There is no Grand Jury for General Sessions; however, when cases are bound over to the Grand Jury, bound over records are created for use in Criminal Court. This eliminates duplication of entry and saves time and effort. The bookkeeping system defaults to the correct amounts due based on the charge and disposition of the case. The CJUS System tracks defendants by generating a SPN (system person number) when a defendant is booked, arrested, ticketed, indicted, etc. This SPN is used for the defendant is he or she is entered a second time into the system by allowing the person entering the record to search for the defendant by name, date of birth, age, sex race, or other identifying characteristic. This allows the system to track a defendant's criminal history. A SPN consolidation function exists to allow certain people to consolidate records when it is discovered that a SPN has been created for a defendant that already has one in the system. Other key people involved in the system such as police officers, judges, attorney, and bondsmen are also given SPN numbers for the purpose of tracking cases.

APPLICATION:	**DataMaxx**
CATEGORY:	Law Enforcement
CONTACT INFO:	DataMaxx Software 700-999-2746 http://www.datamaxx.com
DESCRIPTION:	DataMaxx products provide access to Law Enforcement databases such as NCIC through desktop, mobile and handheld computers, as well as a variety of communication devices.

APPLICATION:	**DataQuest Court Docket**
CATEGORY:	Court Information System
CONTACT INFO:	Dataquest 805 Nashville Highway. Columbia, Tennessee. Columbia, TN (800)388-8467 joyr@dqc.com support@dqc.com http://www.dqc.com
DESCRIPTION:	The DataQuest Court Docket system processes Court Documents, AP, GL, Property Tax, and Business License. Point of Sale and the Court Docket. It automates the process of tracking and managing municipal court operations, allowing you to maintain a complete set of docket books on-line, including a comprehensive record for every case. It's features include: Automates entire court docket process; Designed specifically for municipal courts; Records comprehensive defendant records: Maintains detailed vehicle information; Supports complete case and incident descriptions; Manages and tracks warrants, bonds, case schedules, and case dispositions; Automates entry and management of all financial transactions related to a court case; Generates docket reports, court schedules, financial management reports and state required reports; Special options allow you to quickly update case disposition information and case narratives; Displays every transaction posted for specific court docket record; allows you to immediately view the financial status of any case; Interfaces with computerized Police Information system to automate entry of cases and case disposition information.

APPLICATION:	**DocSTAR (Document Storage and Retrieval)**
CATEGORY:	Document Imaging & Management
CONTACT INFO:	AuthentiDate Holding Corp., dba DocSTAR Schenectady, NY 800.367.5906 partnerinfo@docstar.com www.docstar.com
DESCRIPTION:	DocSTAR, which stands for Document Storage and Retrieval, is an electronic filing system that creates digital images of criminal justice documents such as Citations and Warrants. The information is stored in the system's database. Fingerprint images are also captured within this system. The system offers the following functionality: ease of use; simple transition to a paperless workplace; Safety and security against theft and fraud with our unique AuthentiDate Image Marking technology; dramatic savings in storage and labor costs.

APPLICATION:	**DOS Driver's License History**
CATEGORY:	Law Enforcement
CONTACT INFO:	Tennessee Department of Safety 1150 Foster Avenue Nashville, TN 37249 (615) 251-5216 Fax: (615) 253-2091
DESCRIPTION:	The Driver's License History system contains information on driver violations, accidents and micrographic actions. The information is obtained from tickets, court abstracts, correspondence and various internal documents. The system is used for the benefit of the Court Clerk, Police, Sheriff's Office and the Department of Safety.

APPLICATION:	**DOS Driver's License Issuance**
CATEGORY:	Tennessee Department of Safety 1150 Foster Avenue Nashville, TN 37249 (615) 251-5216 Fax: (615) 253-2091
CONTACT INFO:	Department of Safety
DESCRIPTION:	The Drivers License Issuance System provides accountability for driver licenses, digitized photo images and electronic signatures. It enables instant retrieval of a driver's photo images by the Court Clerk, Police, Sheriff's Office and the Department of Safety.

APPLICATION:	**DOS Vehicle Title & Registration**
CATEGORY:	Law Enforcement
CONTACT INFO:	Tennessee Department of Safety 1150 Foster Avenue Nashville, TN 37249 (615) 251-5216 Fax: (615) 253-2091
DESCRIPTION:	The Vehicle Title & Registration system contains information about Title and Registrations for Tennessee Vehicle License Plates and is used by the Police, Sheriff's Office, Department of Safety and the TBI.

APPLICATION:	**Felony Offender Information Lookup (FOIL)**
CATEGORY:	Law Enforcement
CONTACT INFO:	Tennessee Department of Correction 320 6th Avenue North 4th Floor, Rachel Jackson Building Nashville, TN 37243-0465 (615) 741-1000 http://www.state.tn.us/correction https://www.tennesseeanytime.org/foil/foil_index.jsp;jsessionid=aR_awM6d0Kl7
DESCRIPTION:	The FOIL online service provides the status of convicted felony offenders who are, or have been under the supervision of the Tennessee Department of Correction or the Board of Probation and Parole. The information in FOIL only includes Tennessee felony offenders. Individuals, who have been in county or city facilities, but not state custody, will not appear. Information such as an individual's current status (e.g., inmate, probation, parole) or parole eligibility is available to citizens free of charge.

APPLICATION:	**FileNet**
CATEGORY:	Document Imaging & Management
CONTACT INFO:	Panagon FileNet Corporation 3565 Harbor Blvd Costa Mesa, CA 92626-1420 (714) 327-3400 (800) 345-3638 www.filenet.com
DESCRIPTION:	FileNet provides optical imaging and document management capability and an interface to Kodak IBS document scanners. FileNet Image Manager provides secure and permanent storage and management of enterprise level volumes of document images and other content. It provides power, scalability and performance, delivering rapid access to billions of fixed objects such as documents, faxes, email and rich media for thousands of users.

APPLICATION:	**FullCourt**
CATEGORY:	Court Information System
CONTACT INFO:	Justice Systems Inc. 4600-B McLeod NE Albuquerque, NM 87109 (505) 883-3987 FAX: 505-883-2845 info@justicesystems.com www.justicesystems.com
DESCRIPTION:	FullCourt is a software application developed by Justice Systems, Inc. for court automation. It is a client/server, integrated case management system that runs under Windows. It has functionality for criminal, civil, juvenile, family, traffic and specialty courts. It allows for the automation of a single-user court, or large multi-user court systems.

APPLICATION:	**Government Service Automation (GSA)**
CATEGORY:	Court Information System
CONTACT INFO:	Government Service Automation (GSA) 172 Second Avenue North Nashville, TN 37201 (800) 834-0560 www.gsaweb.com
DESCRIPTION:	GSA is a case management system that improves records accuracy with one-time data entry. GSA software: synchronizes financial activity with case activity; eliminates discrepancies; Indexes cases; Provides immediate public access to cases; Allows multiple parties to look at the same record simultaneously through document imaging, while keeping the official record safely filed.

APPLICATION:	**Homeland Security Information Network (HSIN)**
CATEGORY:	Law Enforcement
CONTACT INFO:	TBI/TRIC Mary Hathaway 901 R.S. Gass Blvd Nashville, TN 37216-2639 (615) 744-4079
DESCRIPTION:	Formerly Joint Regional Information Exchange System (JRIES), the Homeland Security Information Network (HSIN) provides secure real-time connectivity in a collaborative environment with states, urban areas, counties and territories to collect and disseminate information between federal, state, local and tribal agencies involved in combating terrorism.

APPLICATION:	**HTE**
CATEGORY:	Law Enforcement
CONTACT INFO:	Sungard HTE, Inc. HTE Inc. 1000 Business Center Drive Lake Mary, FL 32746 800-727-8088 info@hteinc.com http://www.hteinc.com
DESCRIPTION:	Founded in 1981at HTE, acquired by Sungard Data Systems Inc. in Feb. 2003. Sungard HTE markets a line of municipal software including utility, education, justice, accounting, inventory and personnel management. SunGard HTE Justice software includes integrated applications for court management and related agencies. Applications can work independently or together to form an enterprise-wide solution. SunGard HTE court management software is scalable to meet the needs of virtually any size and type of court or justice agency, from municipal and limited jurisdiction courts, to general and state jurisdictions. SunGard HTE Justice software has functionality for: Court System; Jails; Jury Management; Municipal Court Management; Parking Tickets; Probation System; Prosecutor System; Public Defender System; Return of Service System; Cash Receipts; Click2Gov for Parking Tickets; Click2Gov for Courts; Document management; and Ad hoc Reporting.

APPLICATION:	**Intergraph Computer Aided Dispatch System**
CATEGORY:	Law Enforcement
CONTACT INFO:	Intergraph Public Safety (IPS) 241 Business Park Blvd. Madison, AL 35758 1.877.818.4170 http://www.intergraph.com
DESCRIPTION:	Intergraph Dispatch Software (I/CAD) is an "intelligent" interactive mapping and data entry system. It dispatches, monitors, and manages emergency services utilizing expertise in public safety and geographic information systems. Intergraph began development of public safety applications in 1989 under the name Intergraph Dispatch Management. In January 1995, the division's name was changed to Intergraph Public Safety (IPS) and it became an independent business unit. In 1997, the IPS business unit obtained the status of a subsidiary corporation wholly owned by Intergraph.

APPLICATION:	**Jail Management System (JMS)-Shelby County**
CATEGORY:	Correction
CONTACT INFO:	Shelby County Information Technology Mike Pachis Manager, Information Technology Department, Shelby County (901) 545-4795 mpachis@co.shelby.tn.us
DESCRIPTION:	Jail Management System (JMS) is a custom-developed jail and correction center software application that is supported by the Shelby County Information Services organization. The system utilizes a Tandem computer to provide a minute-by-minute location of each offender throughout the jail and court system, from intake through release. JMS helps to identify where the backlogs are in the process. The ultimate goal is to move entirely to a paperless system that will track offenders from arrest, through release on bond, to prison, all without a paper trail.

APPLICATION:	**Justice Information Management System (JIMS)**
CATEGORY:	Law Enforcement Court Information System
CONTACT INFO:	Knox County Information Systems Shawn D. Ferguson, Project Manager 400 Main Street, Suite L-114 Knoxville, TN 37902 (865) 215-4431 shawn.ferguson@knoxcounty.org
DESCRIPTION:	Justice Information Management System (JIMS) is a custom-developed application that is used by the Knox County Sheriff's Department, the Public Defender's Office, Probation & Parole, and the 6th Judicial District Attorney General's Office. The system was developed by the Information Systems Department of Knox County. Knox County is migrating its data from a system called CITED to JIMS. Knox County built their integrated system around a shared database, which facilitates a multitude of automated functions. Sheriff's Office enters information at the point of data entry. This may include Warrants or Booking information. The information goes to the Court Clerk's office, the DA's office and the Public Defender's office. Court information is entered into the shared database as a case moves through the system. The prosecutor enters information that is accessible by the Grand Jury. When Criminal Court Clerks issue an indictment, it is accessible through the system. Dismissal of charges informs the jail that a suspect is no longer to be housed in the jail.

APPLICATION:	**Justice Support System (JSS)**
CATEGORY:	Law Enforcement
CONTACT INFO:	Shelby County Information Systems Mike Pachis Manager, Information Technology Department, Shelby County (901) 545-4795 mpachis@co.shelby.tn.us
DESCRIPTION:	Justice Support System (JSS) is a custom-developed Court Information System that is based on relational database technology and resides on a Tandem mainframe computer. Some of the data contained in the JSS database can be accessed via the web. Some of the functions performed by JSS include: Label generation for Citation case files; Arrest Warrants; Letters to Offenders; Garnishment of Offender Assets; Court Action Reports for the Department of Safety; Online and printed dockets; State warrants. Post conviction-collections; Failure to pay notices; Suspended licenses for Department of Safety.

APPLICATION:	**Law Enforcement Records Information System (LERIS)**
CATEGORY:	Document Imaging & Management
CONTACT INFO:	Decision Management Company 949-855-6885 FAX 949-458-6004 23361 Madero, Suite 150, Mission Viejo, CA 92691 General Information: sales@dmc-inc.com Customer Support: techsupport@dmc-inc.com www.questys.com
DESCRIPTION:	Law Enforcement Records Imaging System (LERIS) is an electronic imaging process that was developed to capture, distribute, store, and manage documents and related data throughout the Police Department and others who are authorized to obtain it. The system is based upon Questys Text & Image Management System (see http://www.questys.com) to add customized functionality for Law Enforcement agencies. Police and Sheriff departments benefit from document imaging technology as integrated with their existing Mug Shot Systems, Arrest Records databases, Fingerprint Identification Systems and various other mainframe-based Systems for a one-stop Law Enforcement records repository. The system maintains a variety of Law Enforcement document images.

APPLICATION:	**LiveScan**
CATEGORY:	Networking/Communications
CONTACT INFO:	Tennessee Bureau of Investigation 901 R.S. Gass Blvd Nashville, TN 37216-2639 (615) 744-4000 Fax: (615) 744-4599 http://www.tbi.state.tn.us
DESCRIPTION:	A LiveScan computer is a stand-alone system within a Tennessee Law Enforcement jurisdiction that captures fingerprint images online and electronically transmits them (along with demographic information) to an Automated Fingerprint Identification System (AFIS) repository for identification purposes. In Tennessee, LiveScan devices are found at booking agencies, and used at the time of booking an Offender. The information is sent electronically to the TBI's AFIS. Tennessee's approved LiveScan vendors are listed below: Printrak International, Inc. c/o David McNeff or Gunnar Hildemann 1250 North Tustin Avenue Anaheim, CA 92807 (800) 666-2707 (714) 666-1055 fax E-mail: www.printrakinternaitonal.com Paragon Total Solutions c/o Lamar McBurnett 1330 North Park, Suite B Carrollton, GA 30117 (770) 834-5283 ext. 126 (770) 834-5284 E-mail: www.ParagonTotalSolutions.com Identix, Inc. (Visionics) c/o James Thornton 562 Star Flower Lane Sugar Hill, GA 30158 (678) 546-0834 (678) 546-7325 fax E-mail: james.thornton@identix.com Cross Match Technologies, Inc. c/o Paul J. Frasca or Jonathan James 3960 RCA Boulevard, Suite 6001 Palm Beach Gardens, FL 33410 (561) 622-1650 or (770) 541-6325 (561) 622-9938 fax E-mail: sales@crossmatch.net or www.crossmatch.net

APPLICATION:	**National Crime Intelligence Center (NCIC)**
CATEGORY:	Law Enforcement
CONTACT INFO:	Federal Bureau of Investigation, CJIS Division 1000 Custer Hollow Road Clarksburg, WV 26306 http://www.fas.org/irp/agency/doj/fbi/is/ncic.htm
DESCRIPTION:	National Crime Intelligence Center (NCIC) is a computerized index of criminal justice information including criminal record history, fugitives, stolen properties, and missing persons. NCIC is available to Federal, State, and Local Law Enforcement and other criminal justice agencies. The purpose for NCIC is to provide a computerized database for ready access by a criminal justice agency making an inquiry and for prompt disclosure of information in the system from other criminal justice agencies about crimes and criminals. This information assists authorized agencies in criminal justice and related Law Enforcement objectives, such as apprehending fugitives, locating missing persons, locating and returning stolen property, as well as in the protection of the Law Enforcement Officers encountering the individuals described in the system. Data contained in NCIC is provided by the FBI, federal, state, local and foreign criminal justice agencies, and authorized Courts. The system includes data pertaining to: Wanted Persons; Individuals who have been charged with serious and/or significant offenses; Missing Persons; Individuals designated by the U.S. Secret Service as posing a potential danger to the President and/or other authorized protectees; Members of Violent Criminal Gangs; Members of Terrorist Organizations; and Unidentified Persons. Categories of records in the system include: Stolen Vehicle File; Stolen License Plate File; Stolen Boat File; Stolen Gun File; Stolen Article File; Securities File; Wanted Person File; Foreign Fugitive File; Interstate Identification Index File; Identification records regarding persons enrolled in the United States Marshals Service Witness Security Program who have been charged with serious and/or significant offenses; Bureau of Alcohol, Tobacco, and Firearms (BATF) Violent Felon File: Missing Person File; U.S. Secret Service Protective File; Violent Criminal Gang File; Terrorist File; Unidentified Person File. Approved software vendors that provide NCIC access include: DataMaxx Software (state contract) 700-999-2746 Interact Computer Systems 800-768-3911 HTE, Inc. 800-727-8088 Cerulean Technology 404-266-2971 Harmon Technology 978-692-0097

APPLICATION:	**National Incident Based Reporting System (NIBRS)**
CATEGORY:	Law Enforcement
CONTACT INFO:	Federal Bureau of Investigation, CJIS Division 1000 Custer Hollow Road Clarksburg, WV 26306 www.search.org/nibrs/default.asp
DESCRIPTION:	The National Incident Based Reporting (NIBRS) System is the FBI's Uniform Crime Reporting (UCR) program. NIBRS is used to store information about crimes reported to the police. The system has been enhanced to provide comprehensive and detailed crime statistics.

APPLICATION:	**National Law Enforcement Telecommunication System (NLETS)**
CATEGORY:	Network/Telecommunications
CONTACT INFO:	Steve Correll, Executive Director 2930 E. Camelback Road, Suite 160 Phoenix, Arizona 85016
DESCRIPTION:	The National Law Enforcement Telecommunications System (NLETS) is a computer-controlled message-switching network linking local, state, and federal agencies for the purpose of Information exchange. Located in Phoenix, Arizona, and operated and controlled by the states, the NLETS is the only national system that provides state and local Law Enforcement agencies with the capability to exchange free-form criminal justice and criminal justice -related Information via an interstate network. NLETS's vision is to continue to be the premier provider of the network, system, and services that will support and encourage a totally standardized, integrated, international justice system. Acting primarily as a network provider, and to the degree required, a data warehouse, NLETS will endeavor to serve every stratum of the justice and public safety communities.

APPLICATION:	**NetRMS**
CATEGORY:	Law Enforcement
CONTACT INFO:	CRISNet by MEGG Associates Inc. Troy Darrington Account Executive (801) 486-9939 Ext 136 (800) 678-8335 Ext 136 troyd@crisnet.com http://www.crisnet.com
DESCRIPTION:	NetRMS is vendor-developed intranet application for storage, retrieval, and analysis of data collected by Law Enforcement personnel. NetRMS is a records and data management environment for secure, open access by department personnel regardless of their location. NetRMS provides the following features: Based on the Microsoft SQL Server and Internet Information Server, NetRMS serves millions of records at high speeds. The system produces FBI-compliant NIBRS statistics while also automating Summary UCR.

APPLICATION:	**Onbase**
CATEGORY:	Document Imaging & Management
CONTACT INFO:	Hyland Software, Inc. 28500 Clemens Road Westlake, Ohio 44145 440.788.5000 Fax: 440.788.5100 hyland@onbase.com http://www.onbase.com
DESCRIPTION:	Onbase is an Intranet-based integrated document management application that is used to store and search for digitally stored document images. OnBase is an enterprise content management solution that combines the technologies of document imaging, COLD/ERM, integrated document management, and workflow into a single web-enabled application. OnBase is used to store all kinds of document images, host generated reports, application files, HTML forms, emails, video clips, etc. as well as every stage of the document lifecycle creation/input, storage, retrieval, revision and distribution. OnBase is built upon web-enabled, client/server architecture that leverages the openness and scalability of databases like Oracle and Microsoft SQL Server. The system allows access through a browser, a traditional PC, or other enterprise applications.

APPLICATION:	**Printrak Fingerprint Identification System**
CATEGORY:	Law Enforcement
CONTACT INFO:	Printrak International Inc. Francine M. Harris Printrak International Inc. 714/238-2000 www.printrakinternational.com/LiveScan_3000.htm
DESCRIPTION:	Printrak's Digital Justice Solution provides networked fingerprint, photo imaging, computer-aided dispatch and automated Records Management Systems. Printrak provides a LiveScan solution that is used by the TBI. The system is an integrated identification and information system and is used to digitally capture fingerprint images and electronically transmit them to a Law Enforcement repository for identification purposes. In Tennessee, LiveScan sends fingerprint images to the Automated Fingerprint Identification System (AFIS) at the TBI.

APPLICATION:	**ProLaw**
CATEGORY:	Case Management
CONTACT INFO:	ProLaw Software P.O. Box 20628 Albuquerque, NM 87154 Sales: 800/977-6529 Client Services: 888/777-6529 FAX: 505/889-9538 http://www.prolaw.com
DESCRIPTION:	ProLaw is a vendor-developed Case Management software package that provides functionality for tracking cases, relationships, documents, billing and accounting. The system manages contacts, clients, prospects, vendors, and business associations. It helps to locate expert witnesses, and provides full-text document indexing, shadowing and assembly. ProLaw also tracks images, spreadsheets, videos, audio, and charts. It has a feature called rules-based calendaring and has a built-in Legalex Rules for your local jurisdiction. The system integrates with email. ProLaw tracks all the physical files that go with cases, provides time tracking, reporting and analysis, and the ability to bill back to other departments.

APPLICATION:	**Sheriffs Office Management System (SOMS)**
CATEGORY:	Law Enforcement
CONTACT INFO:	M&M Microsystems Allison Elder (888) 644-5786 x101 (731) 571-0763 cellular 731-644-1738 allison@mmmicro.com http://www.mmmicro.com
DESCRIPTION:	SOMS is often referred to as M&M. SOMS handles case and investigation management, traffic trends and patterns, prioritizes Law Enforcement efforts, and booking. The system offers CAD, calls for service, mobile data and records management. It provides compatibility with the TIBRS and electronically transmits data to TIBRS.

APPLICATION:	**Spillman**
CATEGORY:	Law Enforcement
CONTACT INFO:	Spillman Technologies, Inc. 843 S. 100 West Logan, Utah 84321 435.753.1610 (800) 860.8026 Fax: 435.753.3031 info@Spillman.com http://www.spillman.com
DESCRIPTION:	Spillman Records Management software reduces the cost and complexity of entering, managing, and extracting critical data. The software's single entry and inquiry structure prevents duplicate entry and ensures efficient access to accurate data, user-defined reports, NIBRS reporting, automatic alerts notify officers of important information, ensuring officer safety. Chain of evidence reduces length of time between establishing probable cause and obtaining a warrant. Customized security. Spillman Technologies was founded in 1983 by Richard Spillman. Headquartered in Utah, the company is privately owned and specializes in Law Enforcement software for CAD, records, jail and mobile.

APPLICATION:	**TBI Instant Check System (TICS)**
CATEGORY:	Law Enforcement
CONTACT INFO:	Tennessee Bureau of Investigation Brad Truitt, Assistant Director, Information Systems 901 R.S. Gass Blvd Nashville, TN 37216-2639 (615) 744-4008 brad.truitt@state.tn.us www.tbi.state.tn.us
DESCRIPTION:	The TBI Instant Check System (TICS) is used to checks on any person seeking to purchase a firearm from a licensed firearm dealer or to redeem a firearm from pawn from a licensed firearm dealer. The following systems are checked during the process: Computerized Criminal History-Persons who are convicted felons cannot legally possess a firearm. Tennessee Repository for Apprehension of Persons-Fugitives cannot legally possess a firearm. State of Tennessee Orders of Protection-Persons convicted of domestic violence cannot legally possess a firearm. National Crime Information Center-Persons who may pose a threat to the President and/or others afforded protection by the U.S. Secret Service, foreign fugitives; persons currently under supervision of the Federal Bureau of Prisons, Convicted Person on Supervised Release File and the Convicted Sexual Offender Registry cannot legally possess a firearm. Interstate Identification Index-the national repository for criminal history record information. National Instant Check System–the federal instant background check system maintained by the FBI. It houses databases on Denied Persons, Illegal/Unlawful Aliens. Controlled Substance Abusers, Dishonorable Dischargees, Citizenship renunciants and Mental Defectives/Commitments. Note: The Tennessee State Legislature incorporated the Brady Handgun Violence Prevention Act into the Tennessee gun transfer statute with an amendment to T.C.A. 39-17-1316.

APPLICATION:	**T-CAST**
CATEGORY:	Court Information System
CONTACT INFO:	Local Government Data Processing Corporation 714 Armstrong Lane Columbia, TN 38401 (931) 381-1155 www.lgdpc.com
DESCRIPTION:	Local Government is a Tennessee vendor who has developed case management, accounting and booking applications for the State of Tennessee. Local Government Data Processing Corporation is headquartered in Columbia, TN and was established in 1977. Local Government services are provided on a cost recovery basis, with local governments benefiting from the economies of a large-scale computer organization.

APPLICATION:	**Tennessee Applicant Processing Services (TAPS)**
CATEGORY:	Law Enforcement
CONTACT INFO:	Tennessee Bureau of Investigation Brad Truitt, Assistant Director, Information Systems 901 R.S. Gass Blvd Nashville, TN 37216-2639 (615) 744-4008 brad.truitt@state.tn.us www.tbi.state.tn.us
DESCRIPTION:	The Tennessee Applicant Processing Services (TAPS) provides a background check for applicants for paid or volunteer employment or licensing in a wide variety of areas such as childcare, teachers, security and armed guards, and security system contractors. Paper fingerprint card systems take several weeks to process. TAPS has been implemented to give employers and licensing agencies an option to complete the process in days rather than weeks. TAPS allows employers and licensing agencies to send applicants to Processing Centers located throughout the state for processing, adding an extra level of security that the fingerprints belong to the person making application.

APPLICATION:	**Tennessee Court Information System (TnCIS)**
CATEGORY:	Court Information System
CONTACT INFO:	Administrative Office of the Courts Ann Lynn Walker, Assistant Director for Technology Nashville City Center 511 Union Street Nashville TN 37219 (615) 532-7327 x200 FAX: (615) 532-8549 ann.lynn.walker@tscmail.state.tn.us
DESCRIPTION:	The Tennessee Court Information System (TnCIS) is a custom-developed Court Information System that will be used to manage trial court cases. The system is currently in the testing phase of development. The system will integrate case tracking and accounting functions for court clerks, including Circuit, Criminal, Chancery, Probate, Juvenile, and General Sessions Courts.

APPLICATION:	**Tennessee Criminal History Repository (TCHR)**
CATEGORY:	Law Enforcement
CONTACT INFO:	Tennessee Bureau of Investigation 901 R.S. Gass Blvd Nashville, TN 37216-2639 (615) 744-4000 Fax: (615) 744-4599 http://www.tbi.state.tn.us
DESCRIPTION:	The Tennessee Criminal History Repository (TCHR) system is the official repository for criminal history records for the State of Tennessee. The purpose of this system is to provide a standardized and effective method for users to acquire Criminal History Record Information from state and local Law Enforcement and criminal justice agencies. More specifically, this system allows states that have automated criminal history systems to offer an automated response to uniform inquiries, via NLETS. Those states without automated systems may respond manually. The system is used to retrieve criminal history records that may not be available on NCIC's Interstate Identification Index (III) system. In Tennessee, the TBI is the state repository. Arrest data is based on fingerprint cards that have been submitted by Law Enforcement personnel. When an inquiry is generated to a state, that states' records are checked (either automatically or manually) for a match on the data inquired upon. All criminal history inquiries and resulting responses, whether obtained through NCIC or TCHR, must be documented. Each criminal history transaction must be logged in an adequate manner, using a hard copy log, for audit purposes. Logs must be maintained in a secure file for a minimum of 2 years from date of transaction. Criminal history inquires are allowed only for authorized purposes. Abuse of this information capability, including curiosity inquiries, is strictly prohibited by law, and will jeopardize TIES network access.

APPLICATION:	**Tennessee Incident Based Reporting System (TIBRS)**
CATEGORY:	Law Enforcement
CONTACT INFO:	Tennessee Bureau of Investigation Brad Truitt, Assistant Director, Information Systems 901 R.S. Gass Blvd Nashville, TN 37216-2639 (615) 744-4008 brad.truitt@state.tn.us www.tbi.state.tn.us
DESCRIPTION:	Tennessee Incident Based Reporting System (TIBRS) is the method used to collect crime statistics in Tennessee based upon the concept of collecting data on crime incidents and all the elements associated with each incident. The purpose of reporting TIBRS data is to depict the nature and volume of crime in a particular community. It provides the ability to identify when and where crime takes place, what form it takes, characteristics of victims, characteristics of perpetrators. TIBRS is mandated by law in Tennessee.

APPLICATION:	**Tennessee Information Enforcement System (TIES)**
CATEGORY:	Networking/Telecommunications
CONTACT INFO:	Tennessee Bureau of Investigation Brad Truitt, Assistant Director, Information Systems 901 R.S. Gass Blvd Nashville, TN 37216-2639 (615) 744-4008 brad.truitt@state.tn.us www.tbi.state.tn.us
DESCRIPTION:	The Tennessee Information Enforcement System (TIES) is a fully redundant system that provides for the storing and forwarding of messages concerning crime, criminals and criminal activity. The TIES network provides linkage to NCIC, NLETS, the Tennessee Criminal History Repository, in-state hot files, as well as the State Office of Information Resources (OIR) mainframe allowing access statewide to databases containing motor vehicles, boats and drivers license information. Approximately 300,000 message transactions are processed each day.

APPLICATION:	**Tennessee Offender Management Information System (TOMIS)**
CATEGORY:	Correction
CONTACT INFO:	Tennessee Department of Correction 320 6th Avenue North 4th Floor, Rachel Jackson Building Nashville, TN 37243-0465 (615) 741-1000 http://www.state.tn.us/correction
DESCRIPTION:	The Tennessee Offender Management Information System (TOMIS) is used to: manage and answer questions about inmate sentences; apply credits to sentences; produce summaries of inmate's incarceration history and background; identify parole eligibility; identify release dates; monitor court dates, warrants, and extradition requests; classify inmates; monitor inmate movements and visitations; manage financial transactions and employment at state prisons; account for inmate property; collect certain medical information about inmates. Access to TOMIS is granted by the Department of Correction to county jails, workhouses, department of human services, district attorney and Law Enforcement agencies.

APPLICATION:	**Tennessee Judicial Information System (TJIS)**
CATEGORY:	Court Information System
CONTACT INFO:	Administrative Office of the Courts Ann Lynn Walker, Assistant Director for Technology Nashville City Center 511 Union Street Nashville TN 37219 (615) 532-7327 x200 FAX: (615) 532-8549 ann.lynn.walker@tscmail.state.tn.us
DESCRIPTION:	The Tennessee Judicial Information System (TJIS) report is the monthly electronic report generated from all systems to the Administrative Office of the Courts (AOC). The TJIS report is generated for all criminal filings and dispositions, probation violations, Correction violations, writs of habeas corpus, post conviction relief, and various motions.

APPLICATION:	**Tennessee Repository for Apprehension of Persons (TRAP)**
CATEGORY:	Law Enforcement
CONTACT INFO:	Tennessee Bureau of Investigation Brad Truitt, Assistant Director, Information Systems 901 R.S. Gass Blvd Nashville, TN 37216-2639 (615) 744-4008 brad.truitt@state.tn.us www.tbi.state.tn.us
DESCRIPTION:	The primary purpose of Tennessee Repository for the Apprehension of Persons (TRAP) is to serve, as a central repository for outstanding Tennessee warrants which do not satisfy the criteria for entry into the FBI's NCIC Wanted Person File. Although it is programmatically possible for the subject of any outstanding warrant to be entered into either the NCIC Wanted Person File or the TRAP File, record entry into both systems for the same offense by the same agency is prohibited. The retention period for wanted person records in the TRAP database is five years. The MKE/QW0 command is used to query TRAP. When an inquiry results in a match, that response is to be considered as lead-type information. Before any action is taken, the Warrant must be confirmed with the entering agency.

APPLICATION:	**Tiburon**
CATEGORY:	Law Enforcement
CONTACT INFO:	Tiburon, Inc. Customer Support Center 39350 Civic Center Dr., Ste. 250 Fremont, CA 94538 (877) 445-2110 (CSC phone) (510) 742-9590 (CSC fax) support@tibinc.com www.tibinc.com
DESCRIPTION:	Tiburon Software is a vendor-developed records management system used by Law Enforcement Records Divisions. Tiburon's supports small to large multi-jurisdiction Law Enforcement environments. Tiburon provides a department-wide solution for information capture, control, dissemination and retrieval. With over 20 independent, integrated functional modules, Tiburon's RMS records all key operational information and includes tools for analysis and management functions. The product provides: comprehensive incident and person records; integrated master name and master location indexes; alerts on persons and locations of interest; reduces data entry and minimizes errors; and manages property and evidence tracking.

APPLICATION:	**Victim Notification System (VINE)**
CATEGORY:	Correction
CONTACT INFO:	Appriss, Inc. 10401 Linn Station Rd, Suite 200 Louisville, KY 40223-3842 1-866-APPRISS tseigle@appriss.comhttp://www.appriss.com/VINE.html
DESCRIPTION:	VINE, which stands for Victim Information and Notification allows crime victims across the country to obtain information about criminal cases and the custody status of offenders, 24 hours a day, over the telephone, through the web, or by email. The VINE service is available in 36 states in Departments of Correction to keep victims informed about offenders held in state prisons. Note: In 2002, Tennessee law created the Victims of Crime State Coordinating Council to address and promote awareness of victims' and their families' needs.

APPLICATION:	**VisionRMS**
CATEGORY:	Law Enforcement
CONTACT INFO:	VisionAIR, Inc. Angela Shepherd Marketing/Operations (910) 602-7457 alshepherd@visionair.com
DESCRIPTION:	VisionRMS is a vender-developed Records Management System that administers the following Law Enforcement Agency records: incidents, arrests, cases, evidence and property, citations, warrants, civil papers, traffic accidents, internal affairs, intelligence, equipment maintenance, and bar coding. VisionAIR produces state-specific Incident-Based (IBASE), UCR, and NIBRS reports that can be directly transferred to the FBI or the TBI. The system uses relational databases in conjunction with a SQL server. Multiple users and agencies can share common data on wide area networks for total community policing. The system features Multi-jurisdictional Capabilities, Client/Server WindowsNT, NIBRS/UCR Reporting, Graphical User Interface, Searching Ability, Security, Integrated Mapping, Object Linking and Embedding, Online Help and Remote Diagnostics.

APPENDIX E: ACRONYMS

The acronyms listed below are commonly used within Tennessee's criminal justice system and are periodically referenced within the As-Is Model.

AFIS	Automated Fingerprint Identification System
AOC	Administrative Office of the Courts
BOPP	Board of Probation and Parole
CAD	Computer Aided Dispatch
CAIN	Computer Activities Intelligence Network
FBI	Federal Bureau of Investigation
FOIL	Felony Offender Information Lookup
LEA	Law Enforcement Agency
NCIC	National Crime Information Center
NLETS	National Law Enforcement Telecommunication System
OCA	Originating Case Agency Number
ORI	Originating Agency Identifier
RMS	Records Management System
SCN	State Control Number
SID	State Identification Number
SPN	System Person Number (Hamilton County)
TBI	Tennessee Bureau of Investigation
TCA	Tennessee Code Annotated
TCHR	Tennessee Criminal History Repository
TCIC	Tennessee Crime Information Center
TDOC	Tennessee Dept. of Correction
TIBRS	Tennessee Incident Based Reporting System
TIES	Tennessee Information Enforcement System
TOMIS	Tennessee Offender Management Information System
TRAP	Tennessee Repository for Apprehension of Persons
VINE	Victim Information & Notification Everyday